Jan. 28, 1947. R. T. JAMES 2,415,012

TOY AND PROCESS OF USE

Filed Aug. 21, 1946 3 Sheets-Sheet 1

Fig. 1.

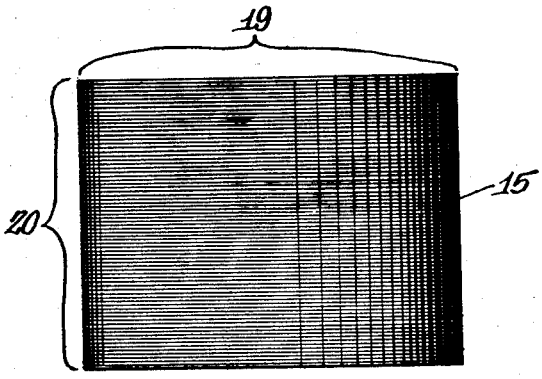

Fig. 2.

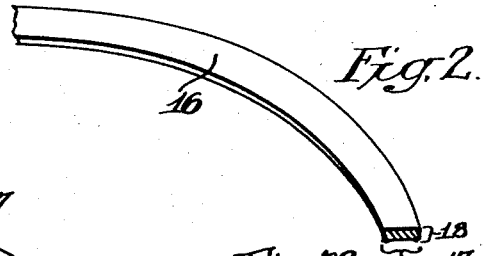

Fig. 2a

Fig. 6.

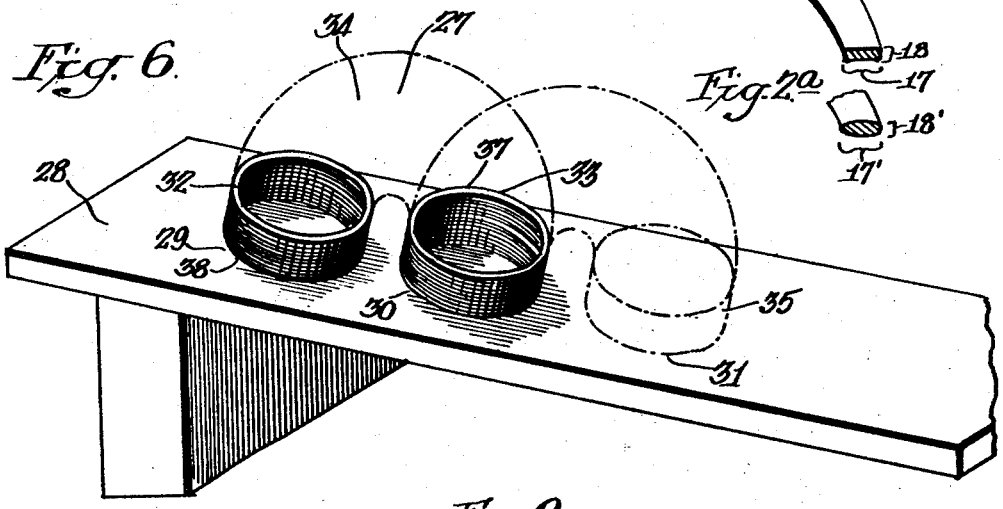

Fig. 8.

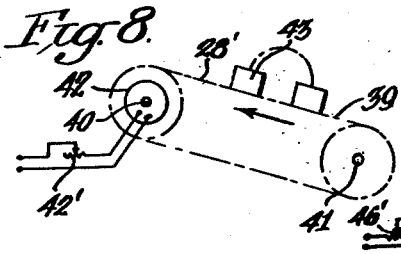

Fig. 9.

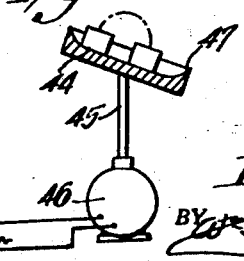

INVENTOR:
Richard T. James,
BY [illegible]
ATTORNEYS.