US010798511B1

(12) **United States Patent**
Sheaffer et al.

(10) **Patent No.: US 10,798,511 B1**
(45) **Date of Patent: Oct. 6, 2020**

(54) **PROCESSING OF AUDIO SIGNALS FOR SPATIAL AUDIO**

(71) Applicant: **Apple Inc.**, Cupertino, CA (US)

(72) Inventors: **Jonathan D. Sheaffer**, Sunnyvale, CA (US); **Juha O. Merimaa**, San Mateo, CA (US); **Jason Wung**, Culver City, CA (US); **Martin E. Johnson**, Los Gatos, CA (US); **Peter A. Raffensperger**, Cupertino, CA (US); **Joshua D. Atkins**, Los Angeles, CA (US); **Symeon Delikaris Manias**, Los Angeles, CA (US); **Mehrez Souden**, Los Angeles, CA (US)

(73) Assignee: **APPLE INC.**, Cupertino, CA (US)

(*) Notice: Subject to any disclaimer, the term of this patent is extended or adjusted under 35 U.S.C. 154(b) by 0 days.

(21) Appl. No.: **16/378,438**

(22) Filed: **Apr. 8, 2019**

Related U.S. Application Data

(60) Provisional application No. 62/730,928, filed on Sep. 13, 2018.

(51) **Int. Cl.**
H04S 5/00 (2006.01)
G10K 11/178 (2006.01)
H04R 1/40 (2006.01)

(52) **U.S. Cl.**
CPC ***H04S 5/00*** (2013.01); ***G10K 11/17853*** (2018.01); ***H04R 1/406*** (2013.01); *H04S 2420/01* (2013.01)

(58) **Field of Classification Search**
CPC H04S 2420/01; H04S 5/00; H04R 1/406; G10K 11/17853
USPC 381/17
See application file for complete search history.

(56) **References Cited**

U.S. PATENT DOCUMENTS

7,567,845	B1	7/2009	Avendano et al.
2018/0090150	A1	3/2018	Merimaa et al.
2018/0091920	A1*	3/2018	Family H04S 7/304

OTHER PUBLICATIONS

Alexandridis, Anastasios, et al., "Capturing and Reproducing Spatial Audio Based on a Circular Microphone Array", Journal of Electrical and Computer Engineering, vol. 2013, Feb. 13, 2013, 17 pages.

Berge, Svein, et al., "High Angular Resolution Planewave Expansion", Proc. of the 2nd International Symposium on Ambisonics and Spherical Acoustics, May 6, 2010, 6 pages.

(Continued)

Primary Examiner — Paul Kim
(74) *Attorney, Agent, or Firm* — Womble Bond Dickinson (US) LLP

(57) **ABSTRACT**

Processing input audio channels for generating spatial audio can include receiving a plurality of microphone signals that capture a sound field. Each microphone signal can be transformed into a frequency domain signal. From each frequency domain signal, a direct component and a diffuse component can be extracted. The direct component can be processed with a parametric renderer. The diffuse component can be processed with a linear renderer. The components can be combined, resulting in a spatial audio output. The levels of the components can be adjusted to match a direct to diffuse ratio (DDR) of the output with the DDR of the captured sound field. Other aspects are also described and claimed.
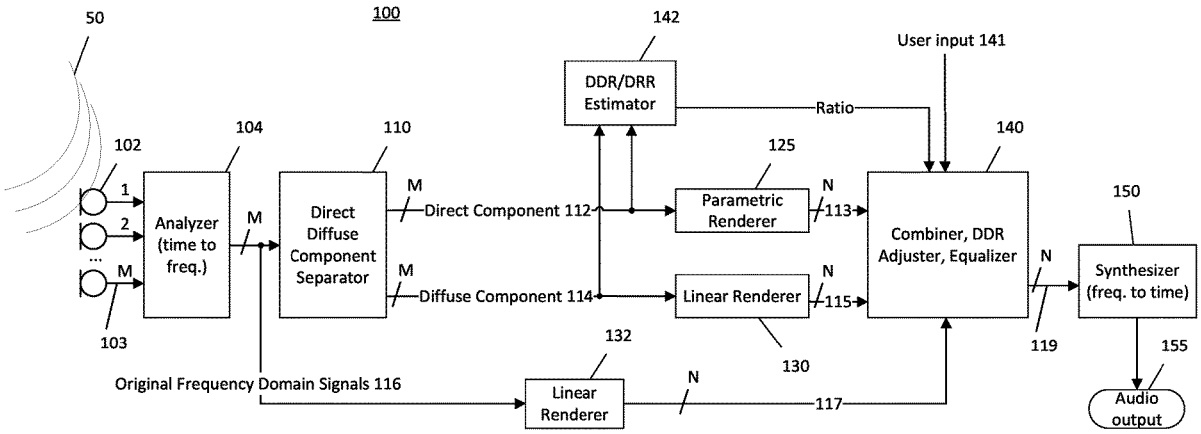
19 Claims, 5 Drawing Sheets