Aug. 18, 1953 J. W. HETRICK 2,649,311

SAFETY CUSHION ASSEMBLY FOR AUTOMOTIVE VEHICLES

Filed Aug. 5, 1952

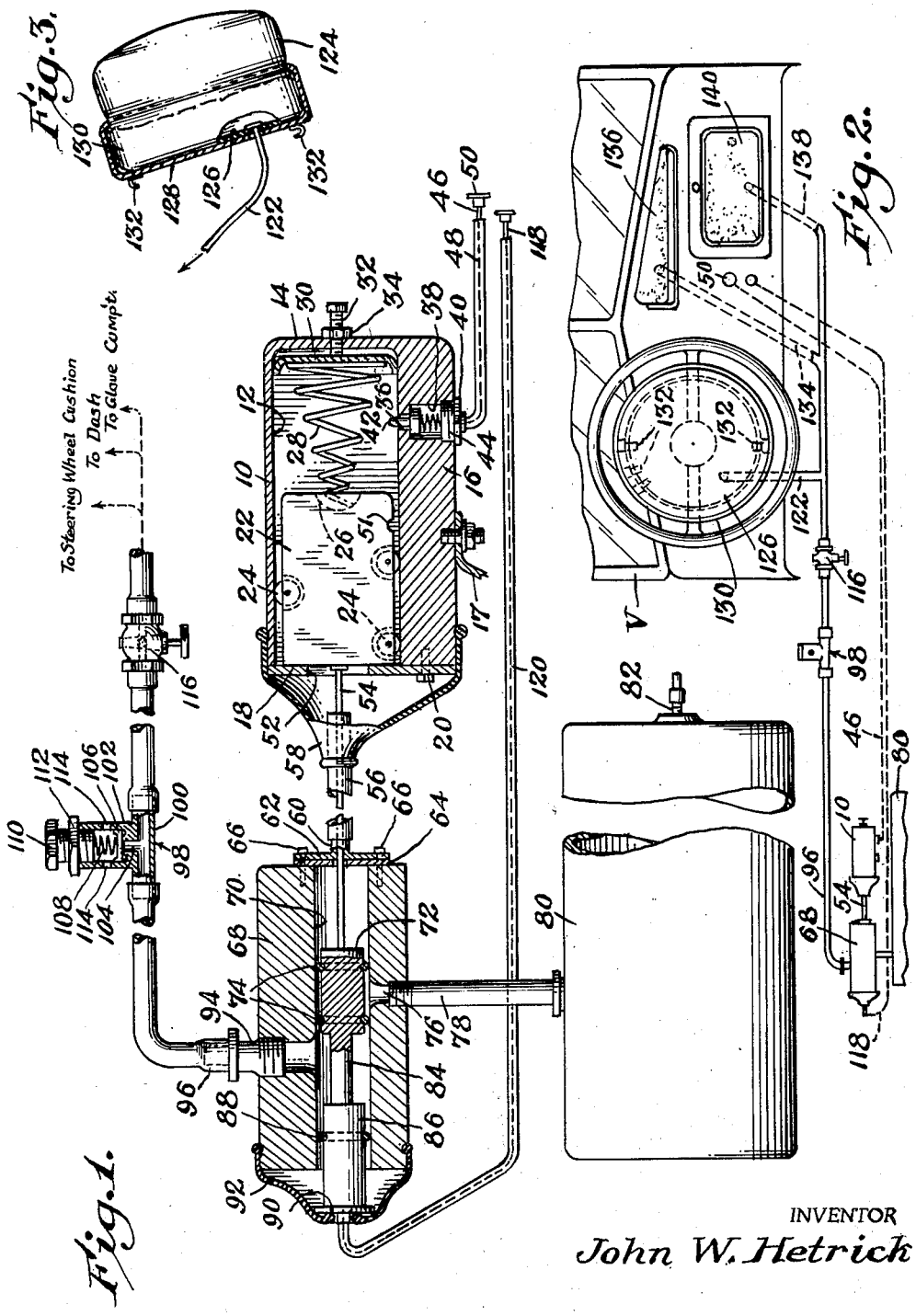

INVENTOR
John W. Hetrick

BY
McMorrow, Berman + Davidson
ATTORNEYS