Oct. 17, 1961

J. H. MYER

3,004,711

TEMPERATURE CONTROLLER

Filed April 28, 1958

Fig. 1.

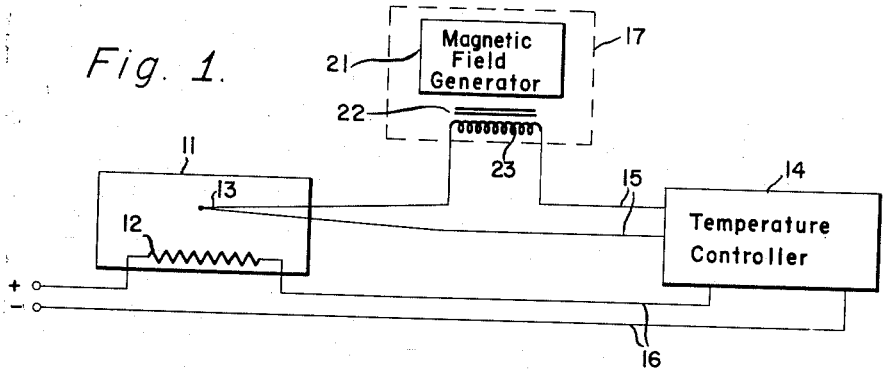

Fig. 3.

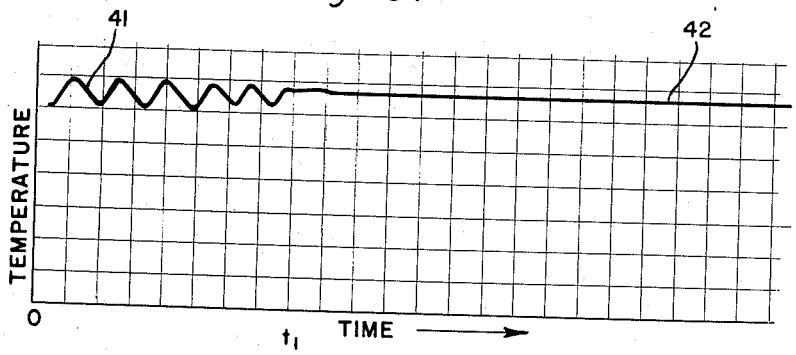

Fig. 2.

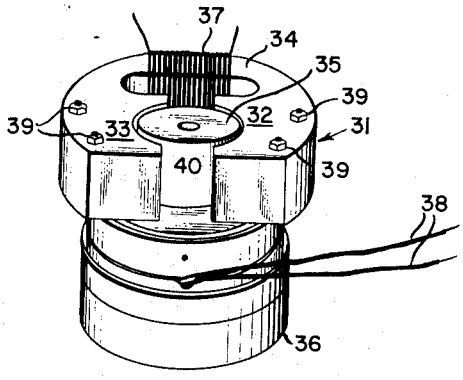

Fig. 4.

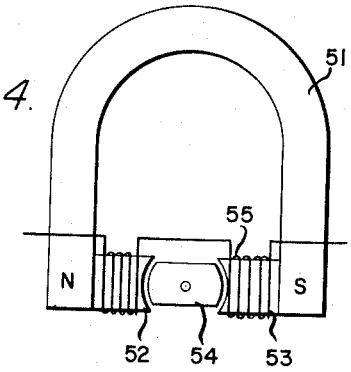

Jon H. Myer,
INVENTOR.

BY.

Billy G. Robbins

ATTORNEY.