Dec. 14, 1937. W. W. CECIL, 2D 2,102,510

PAPER DRINKING CUP

Filed July 29, 1936

Fig. 1.

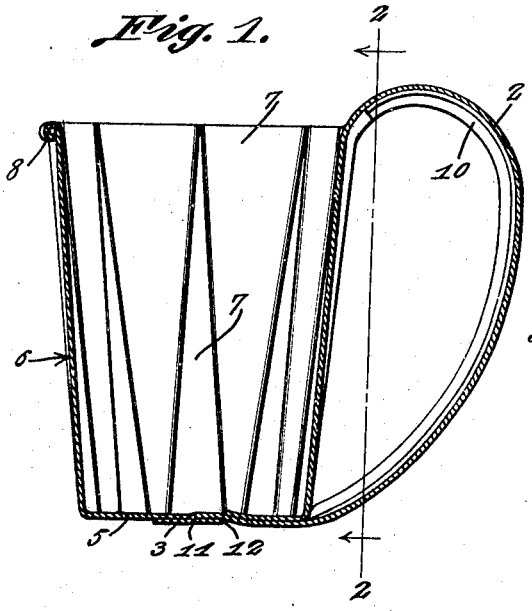

Fig. 2.

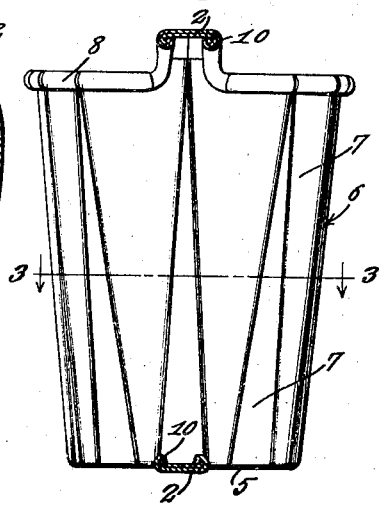

Fig. 3.

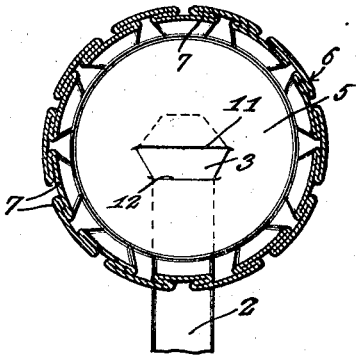

Fig. 4.

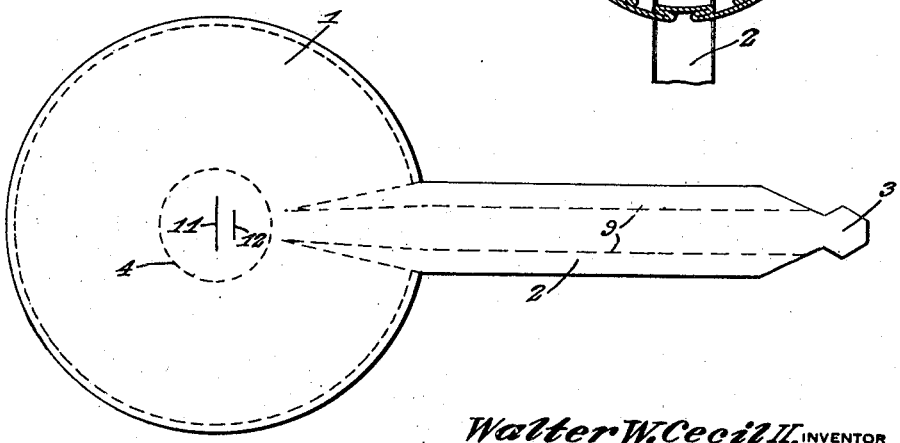

Walter W. Cecil II, INVENTOR

BY Victor J. Evans & Co.

ATTORNEYS