US007075209B2

(12) **United States Patent**
Howell et al.

(10) **Patent No.: US 7,075,209 B2**
(45) **Date of Patent: Jul. 11, 2006**

(54) **COMPLIANT BISTABLE MICROMECHANISM**

(75) Inventors: **Larry L. Howell**, Orem, UT (US); **Matthew Parkinson**, Ann Arbor, MI (US); **Brian D. Jensen**, Ann Arbor, MI (US); **Gregory M. Roach**, Springville, UT (US)

(73) Assignee: **Brigham Young University**, Provo, UT (US)

(*) Notice: Subject to any disclaimer, the term of this patent is extended or adjusted under 35 U.S.C. 154(b) by 0 days.

(21) Appl. No.: **10/333,302**

(22) PCT Filed: **Jul. 18, 2001**

(86) PCT No.: **PCT/US01/22661**

§ 371 (c)(1),
(2), (4) Date: **Jan. 17, 2003**

(87) PCT Pub. No.: **WO02/07300**

PCT Pub. Date: **Jan. 24, 2002**

(65) **Prior Publication Data**

US 2004/0020968 A1 Feb. 5, 2004

Related U.S. Application Data

(60) Provisional application No. 60/218,843, filed on Jul. 18, 2000.

(51) **Int. Cl.**
H02N 1/00 (2006.01)
G01P 15/02 (2006.01)

(52) **U.S. Cl.** **310/309**; 200/181; 73/514.01; 73/514.21; 73/514.32

(58) **Field of Classification Search** 310/306, 310/307, 309; 257/415, 420; 200/181; 60/516, 60/527; 73/514.01, 514.21, 514.32
See application file for complete search history.

(56) **References Cited**

U.S. PATENT DOCUMENTS

2,931,954	A	4/1960	Diesel	361/207
5,375,033	A	12/1994	MacDonald	361/281
5,677,823	A	10/1997	Smith	361/234
5,998,906	A	12/1999	Jerman et al.	310/309
6,019,113	A	2/2000	Allston et al.	137/1
6,215,081	B1	4/2001	Jensen et al.	200/341
6,236,300	B1	5/2001	Minners	337/139
6,239,685	B1	5/2001	Albrecht et al.	337/365
6,255,757	B1	7/2001	Dhuler et al.	310/307
6,303,885	B1	10/2001	Hichwa et al.	200/181
2003/0029705	A1	2/2003	Qiu et al.	200/181

Primary Examiner—Karl Tamai
(74) *Attorney, Agent, or Firm*—Madson & Austin

(57) **ABSTRACT**

A method for designing and optimnizing compliant mechanisms is provided, in addition to bistable compliant mechanism designs. According to the method, a selected compliant structure may be modeled analytically, and the characteristics of the analytical model may be optimized. Multiple recursive optimization algorithms may be used, for example, to determine the general location of a global optimum, and then to determine the values of the analytical model characteristics that obtain the global optimum or a feasible configuration for the selected compliant structure. Geometric characteristics of the selected compliant structure may be derived from the values of the analytical model characteristics. Bistable compliant designs may have a shuttle disposed between a pair of base members. The shuttle (**20**) may be linked to the base members (**22**, **24**) by a pair of legs (**30**, **32**), via flexural pivots. The base members may have cantilevered mounting beams to create deformable mounts that receive and store potential energy. The stable configurations are those in which the stored potential energy is at a relative minimum.
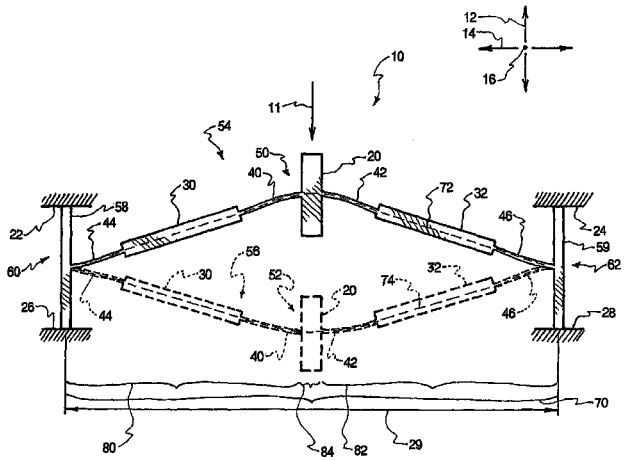
67 Claims, 10 Drawing Sheets