LIGHT WEIGHT CRASH LOCATOR BEACON

Filed March 7, 1960 10 Sheets-Sheet 1

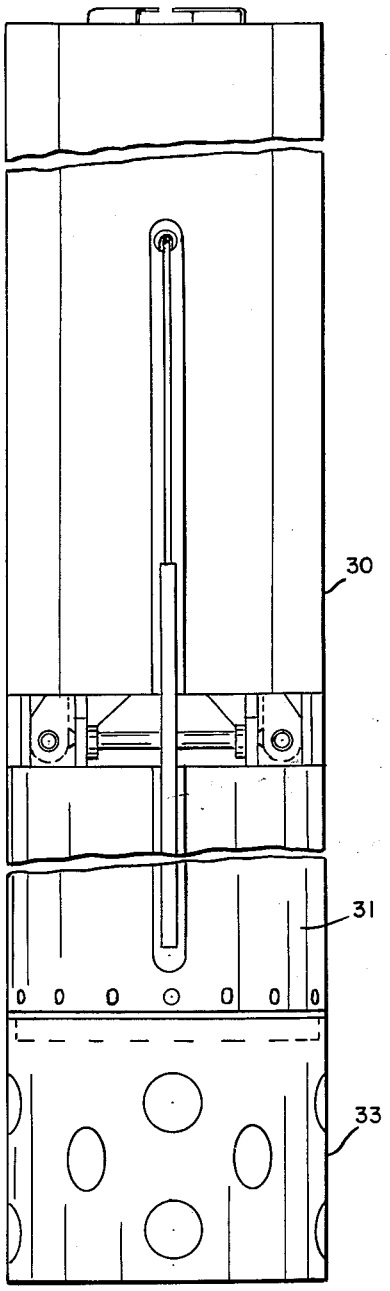

Fig-1

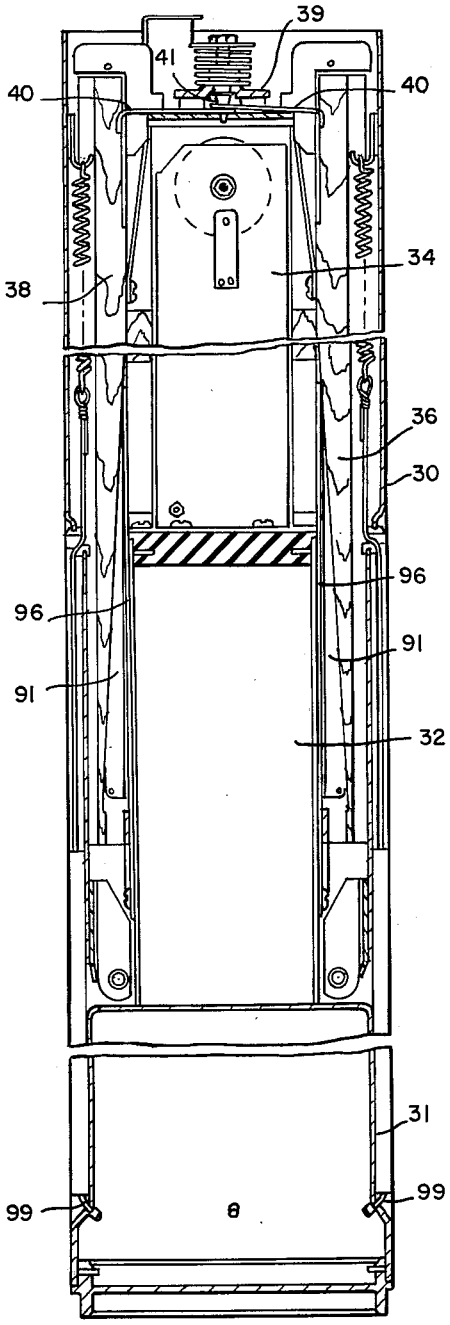

Fig-3

INVENTOR.
JANIS A. SIRONS
BY Wade Koontz
ATTORNEY
and
Richard J. Killoren
AGENT