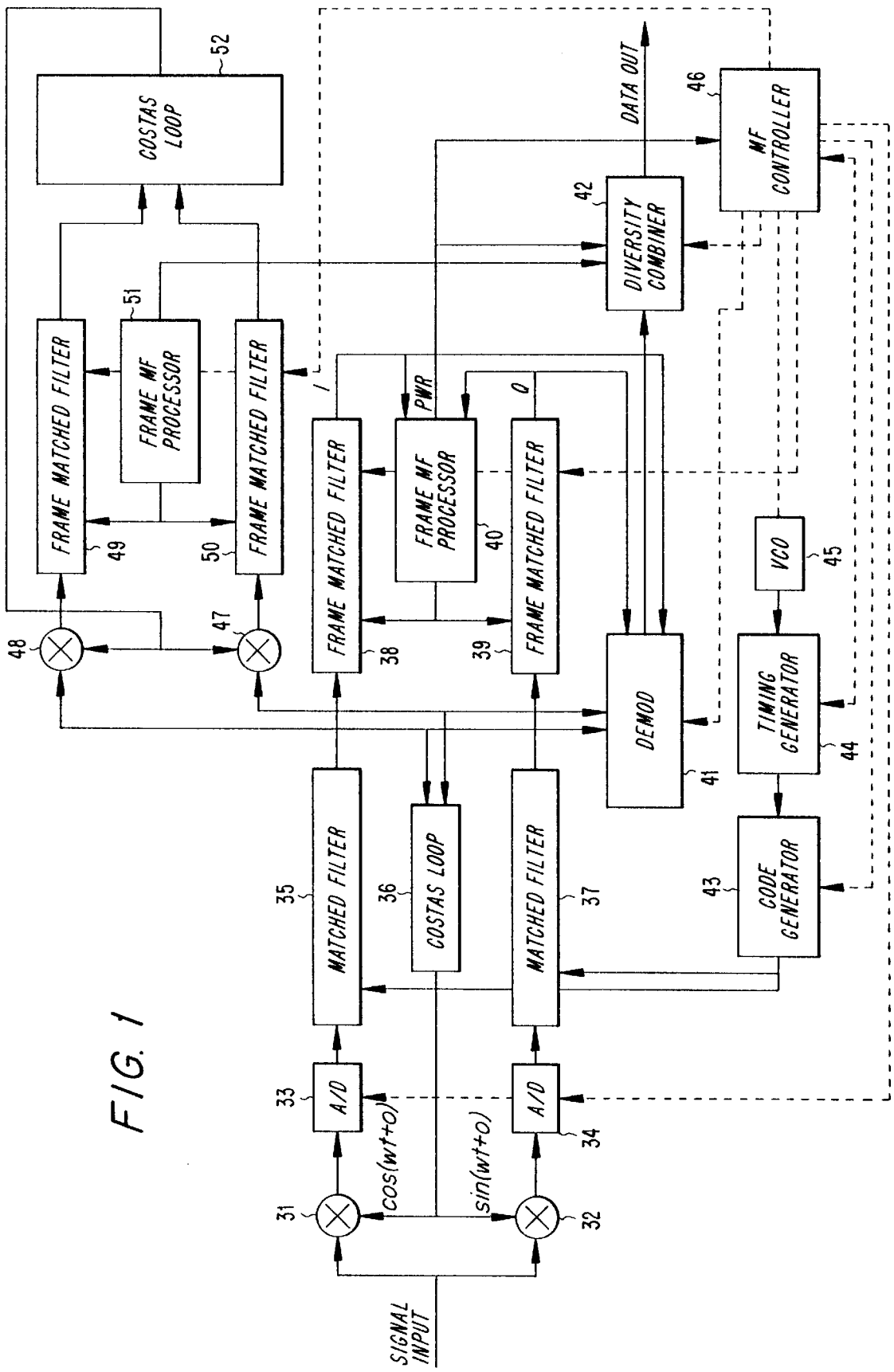
SIGNAL INPUT
31
32
A/D
33
A/D
34
cos(wt+o)
sin(wt+o)
MATCHED FILTER
35
COSTAS LOOP
36
MATCHED FILTER
37
FRAME MATCHED FILTER
38
FRAME MF PROCESSOR
40
FRAME MATCHED FILTER
39
I
PWR
Q
DEMOD
41
DIVERSITY COMBINER
42
DATA OUT
MF CONTROLLER
46
CODE GENERATOR
43
TIMING GENERATOR
44
VCO
45
48
47
FRAME MATCHED FILTER
49
FRAME MF PROCESSOR
51
FRAME MATCHED FILTER
50
COSTAS LOOP
52

FIG. 1