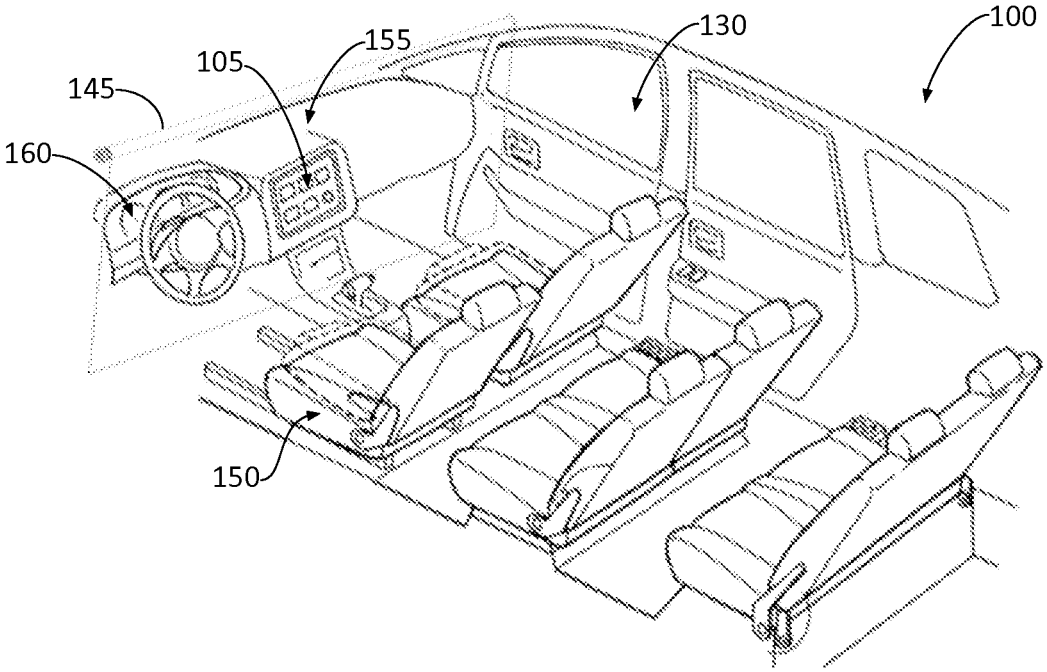

Figure 2A

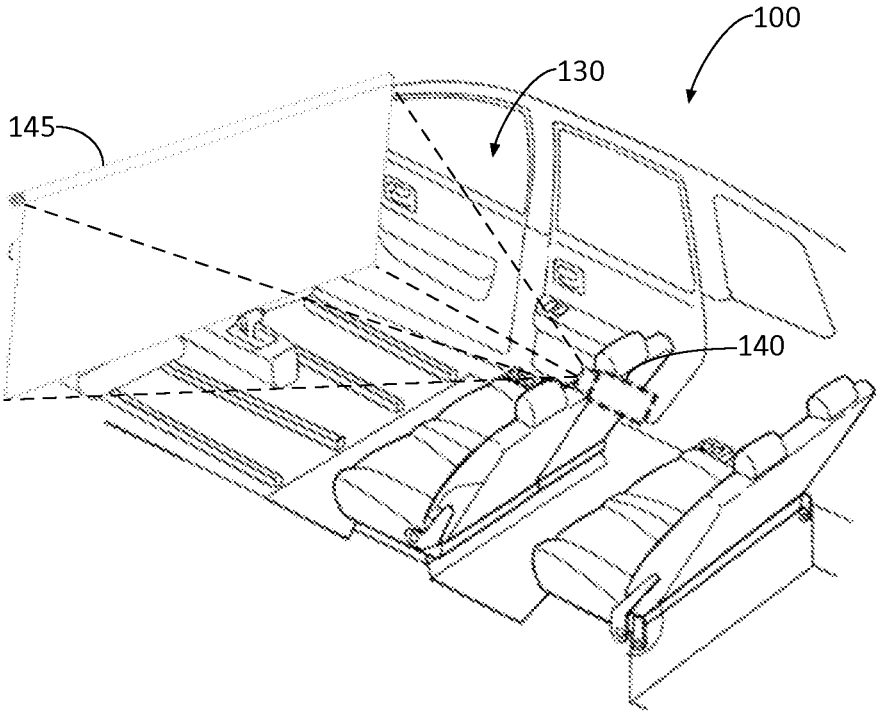

Figure 2B