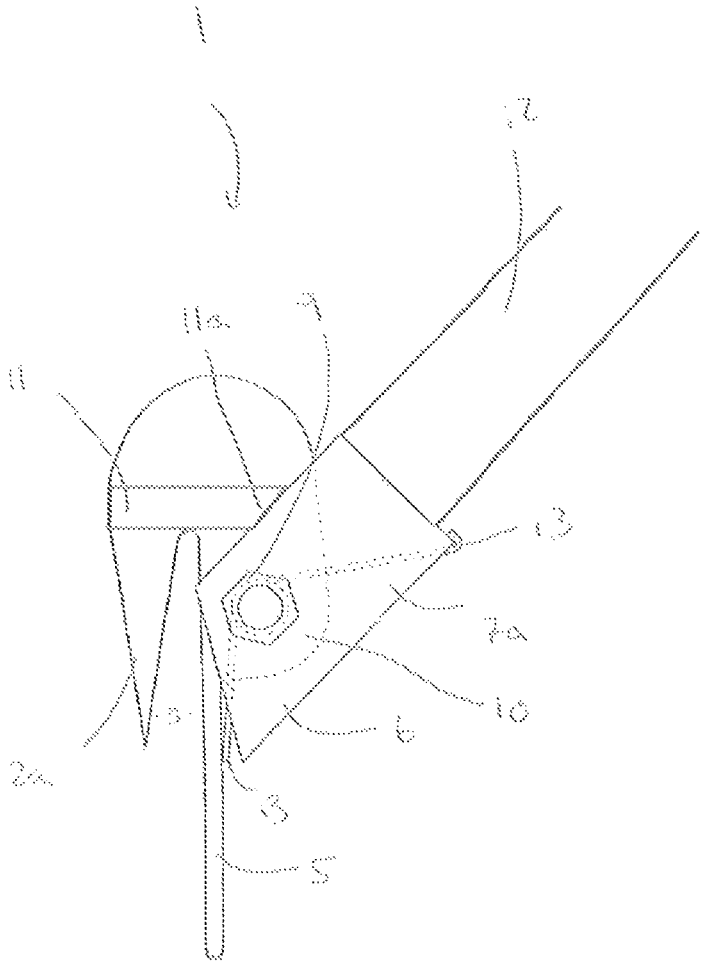

Fig 2