F. J. Terrell.

Forming Hoop Skirt Clasps.

No. 42,608. Patented May 3, 1864.

Fig; 1.

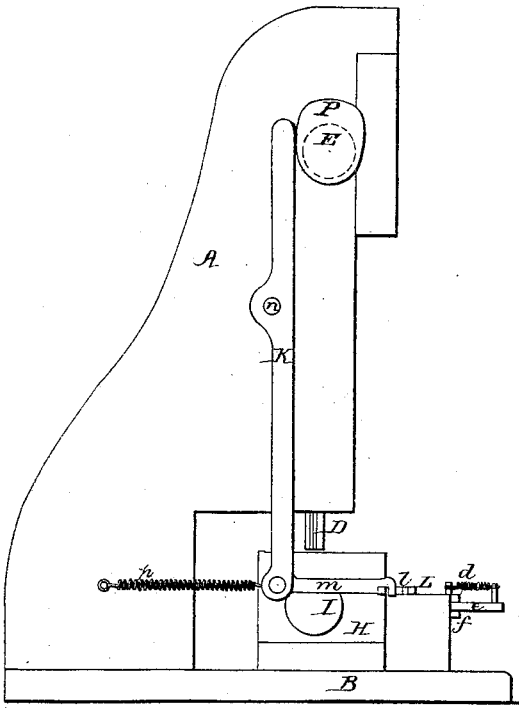

Fig; 2.

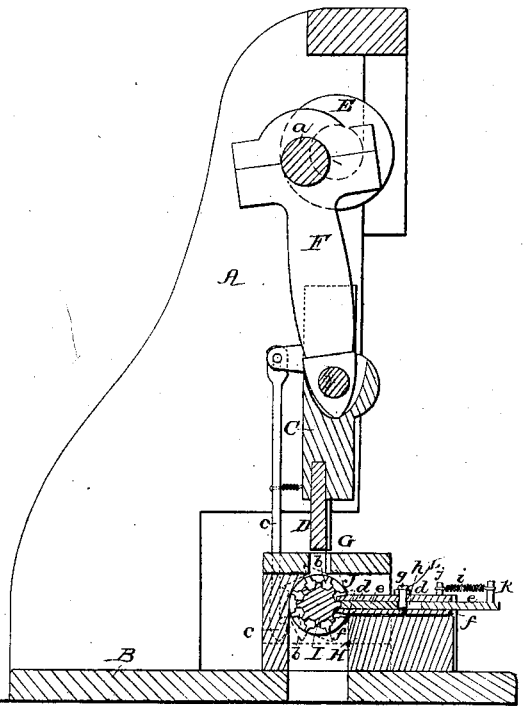

Fig; 3.

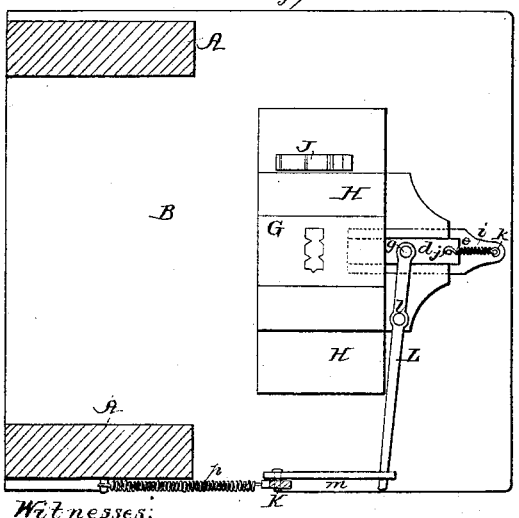

Fig; 4.

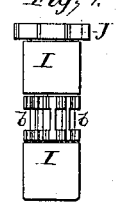

Witnesses;
J. W. Coombs
Henry Morris

Inventor;
F. J. Terrell
per Munn & Co
Attorneys

N. PETERS, PHOTO-LITHOGRAPHER, WASHINGTON, D. C.