Jan. 5, 1932. I. SIKORSKY 1,839,808

AIRCRAFT INCLUDING SWINGING STAIR STRUCTURE FOR SAME

Original Filed Dec. 30, 1929

Fig. 1.

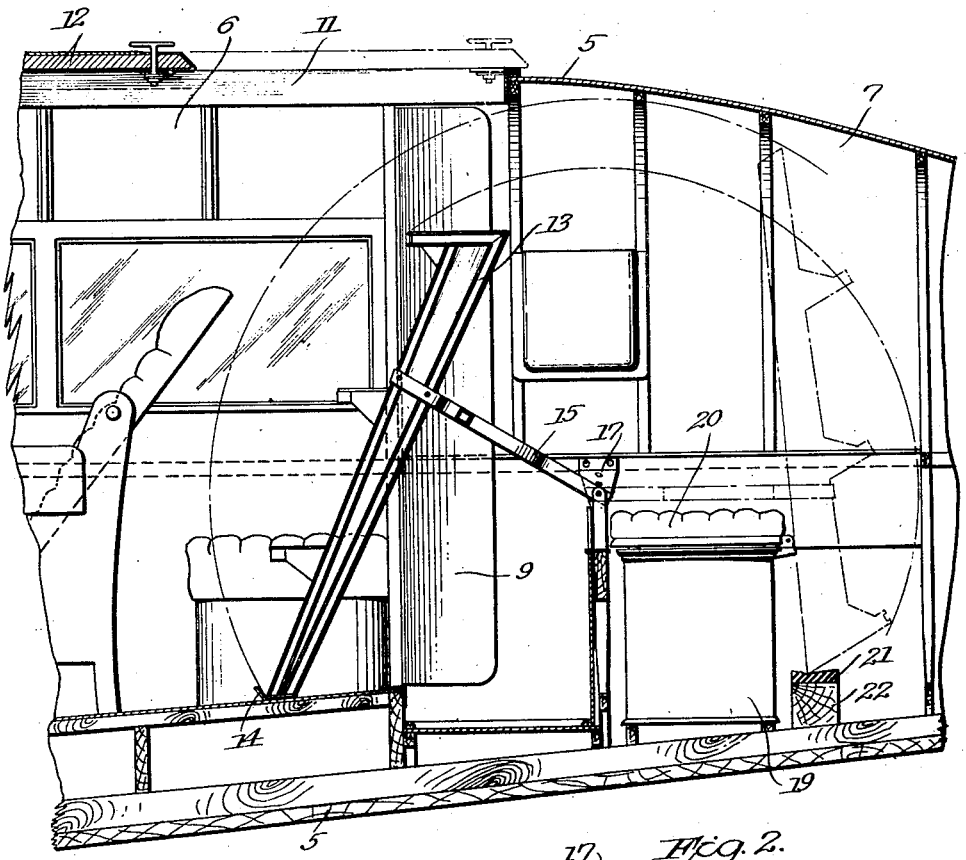

Fig. 2.

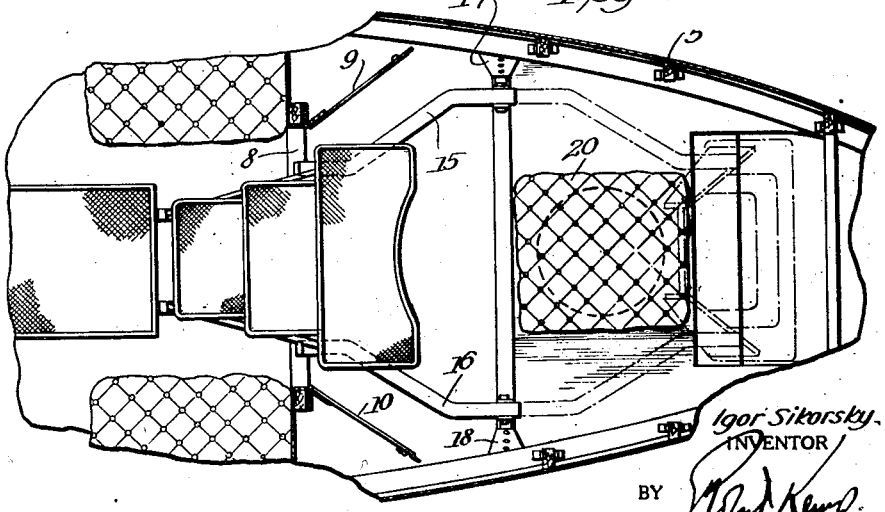

Igor Sikorsky.
INVENTOR

BY
ATTORNEY