(No Model.)

L. P. RAY.

DUST PAN.

No. 587,607. Patented Aug. 3, 1897.

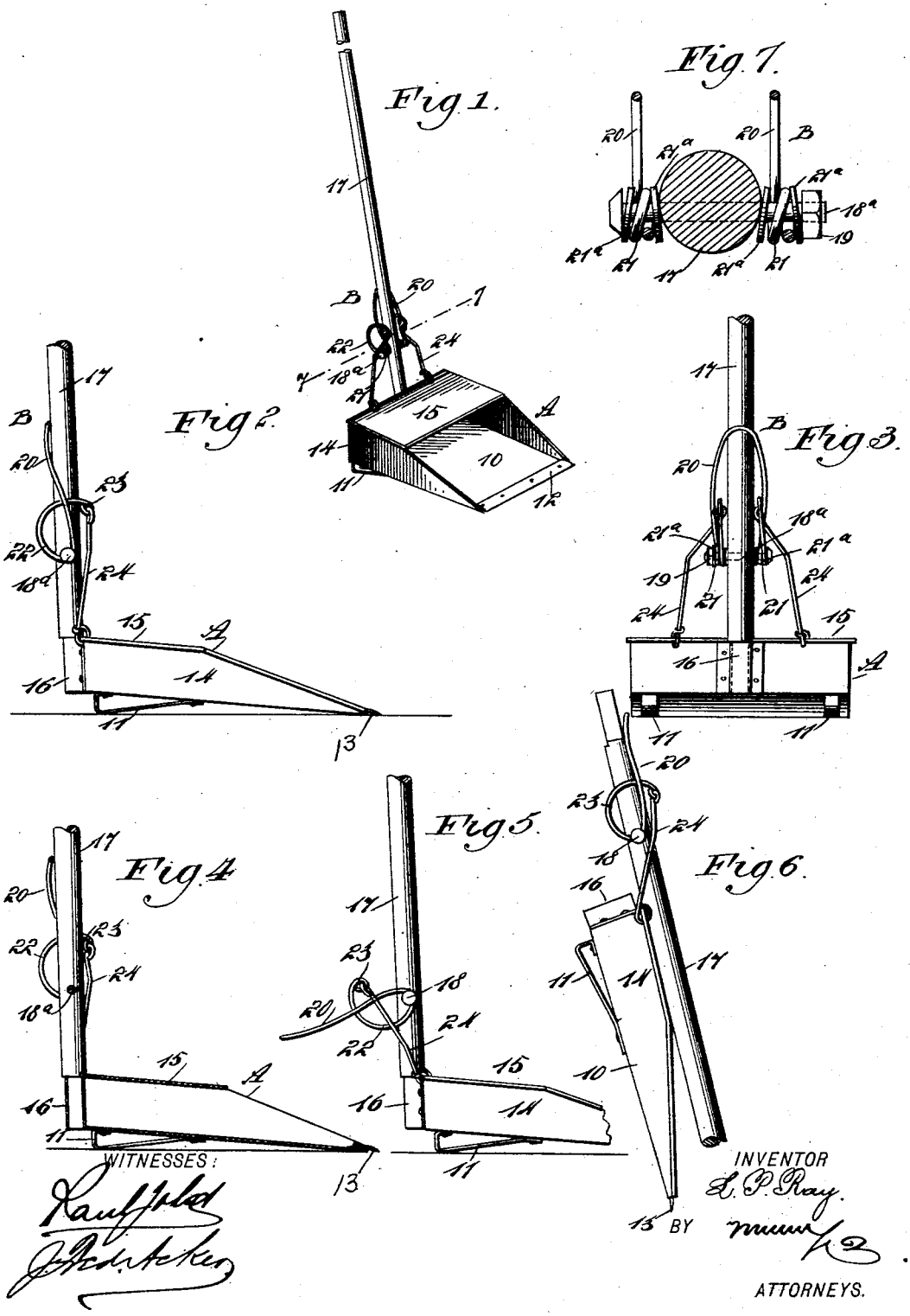

THE NORRIS PETERS CO., PHOTO-LITHO., WASHINGTON, D. C.