(No Model.) 7 Sheets—Sheet 1.

J. E. MATZELIGER.

LASTING MACHINE.

No. 274,207. Patented Mar. 20, 1883.

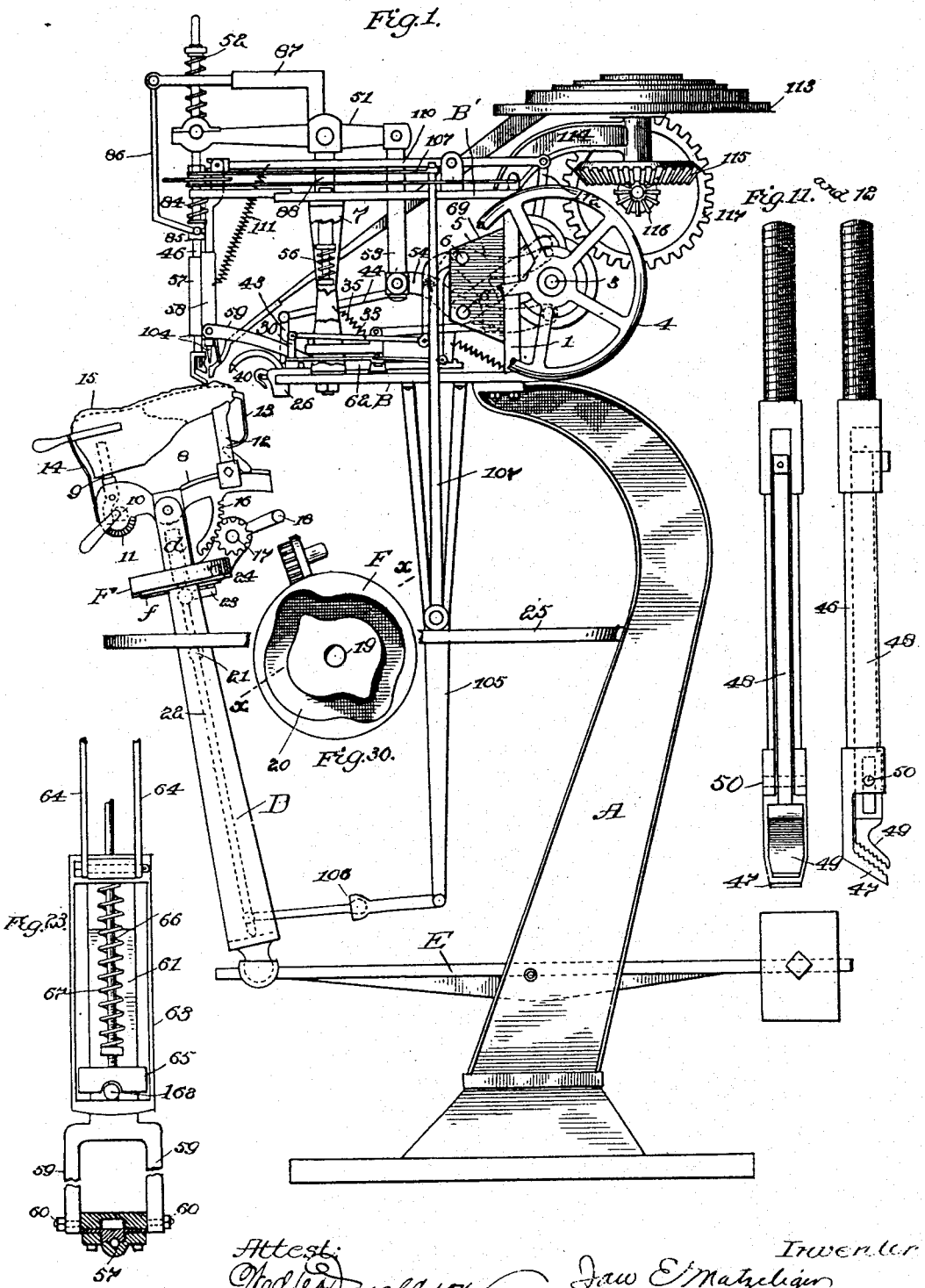

Attest:
Wallace Donaldson
D. W. Seely

Inventor
Jaw E. Matzeliger
by Ellis Spear
Atty.

N. PETERS, Photo-Lithographer, Washington, D. C.