(No Model.)

3 Sheets—Sheet 1.

D. CLERK.

MOTOR WORKED BY COMBUSTIBLE GAS OR VAPOR.

No. 249,307. Patented Nov. 8, 1881.

FIG. 1.

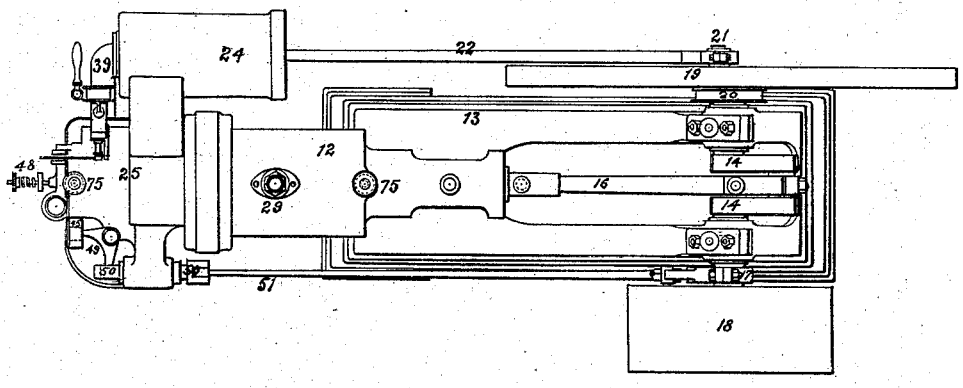

FIG. 2.

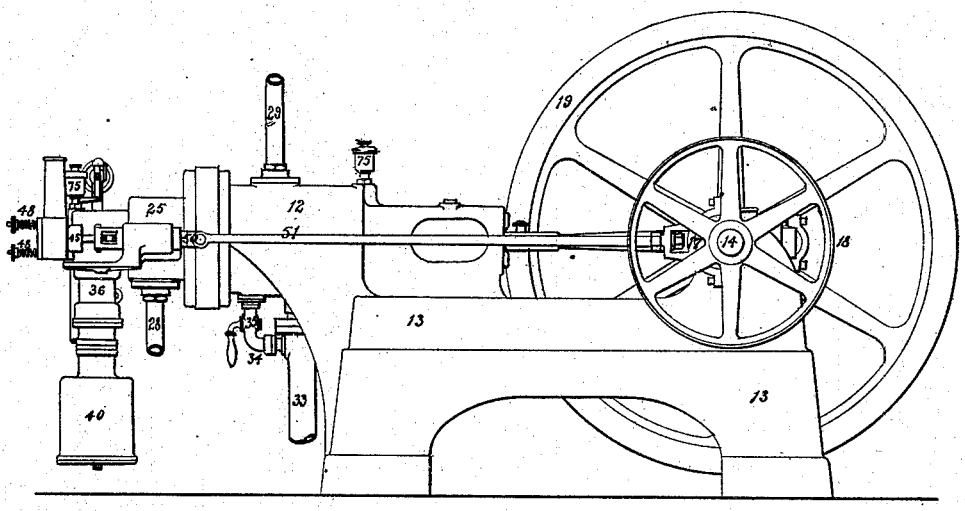

Witnesses:
D. S. Williams
James F. Tobin

Inventor:
Dugald Clerk
by his attys
Howson and Sons

N. PETERS. Photo-Lithographer, Washington, D. C.