COOLED GAS TURBINE VANES

Filed July 20, 1965 2 Sheets-Sheet 2

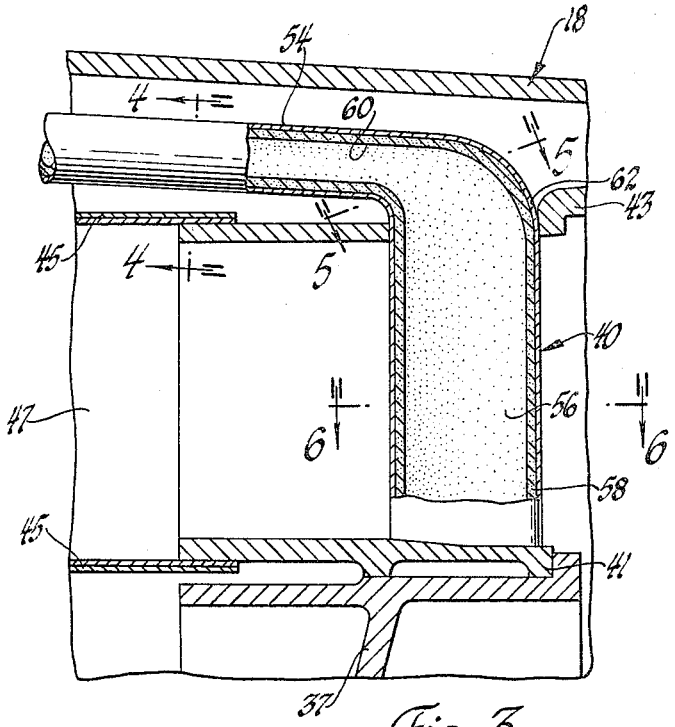


Fig. 3

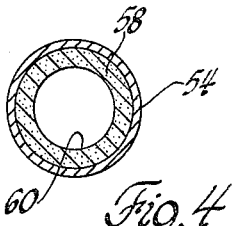


Fig. 4

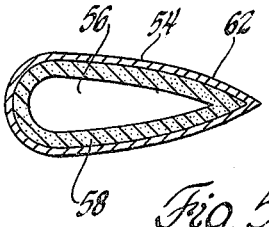


Fig. 5

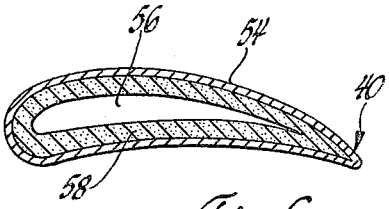


Fig. 6

INVENTOR.
Hamilton L. McCormick, deceased
Signe M. McCormick, executrix
BY
Paul Fitzpatrick
ATTORNEY