June 1, 1965

T. T. BROWN

3,187,206

ELECTROKINETIC APPARATUS

Filed May 9, 1958

2 Sheets-Sheet 1

FIG. 1

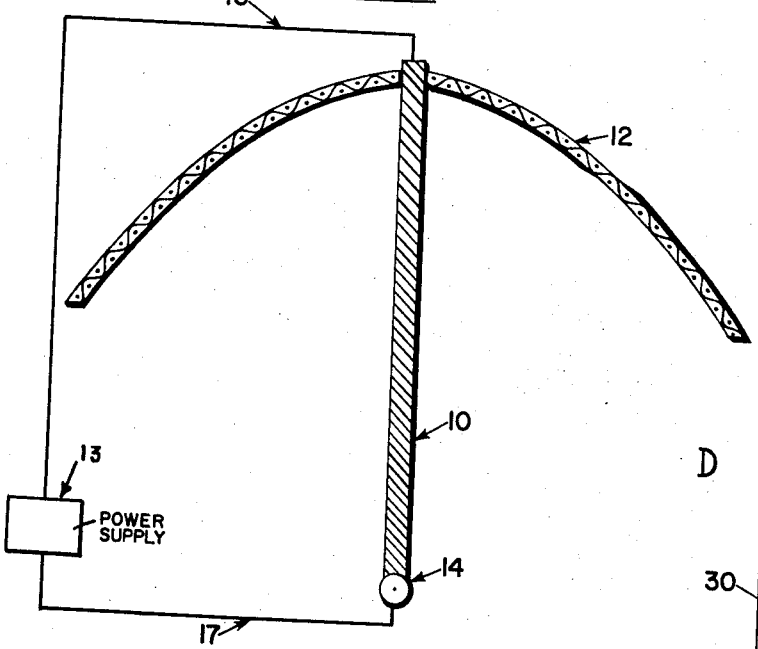

FIG. 3

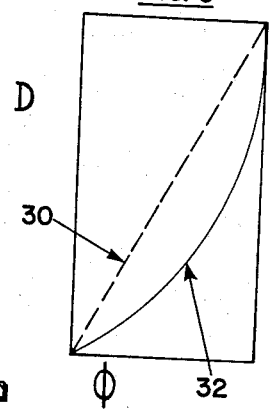

FIG. 2

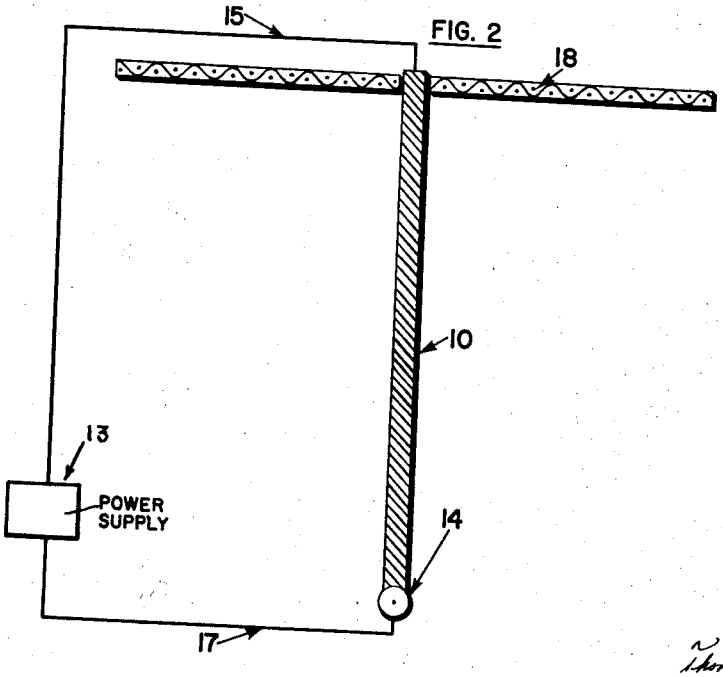

INVENTOR.
Thomas Townsend Brown

BY

Watson, Cole, Grindle & Watson
Attorneys