Aug. 21, 1945. L. S. MARSHALL 2,383,006

TESTING APPARATUS FOR LINK TRAINER RECORDERS

Filed Sept. 3, 1943 2 Sheets-Sheet 1

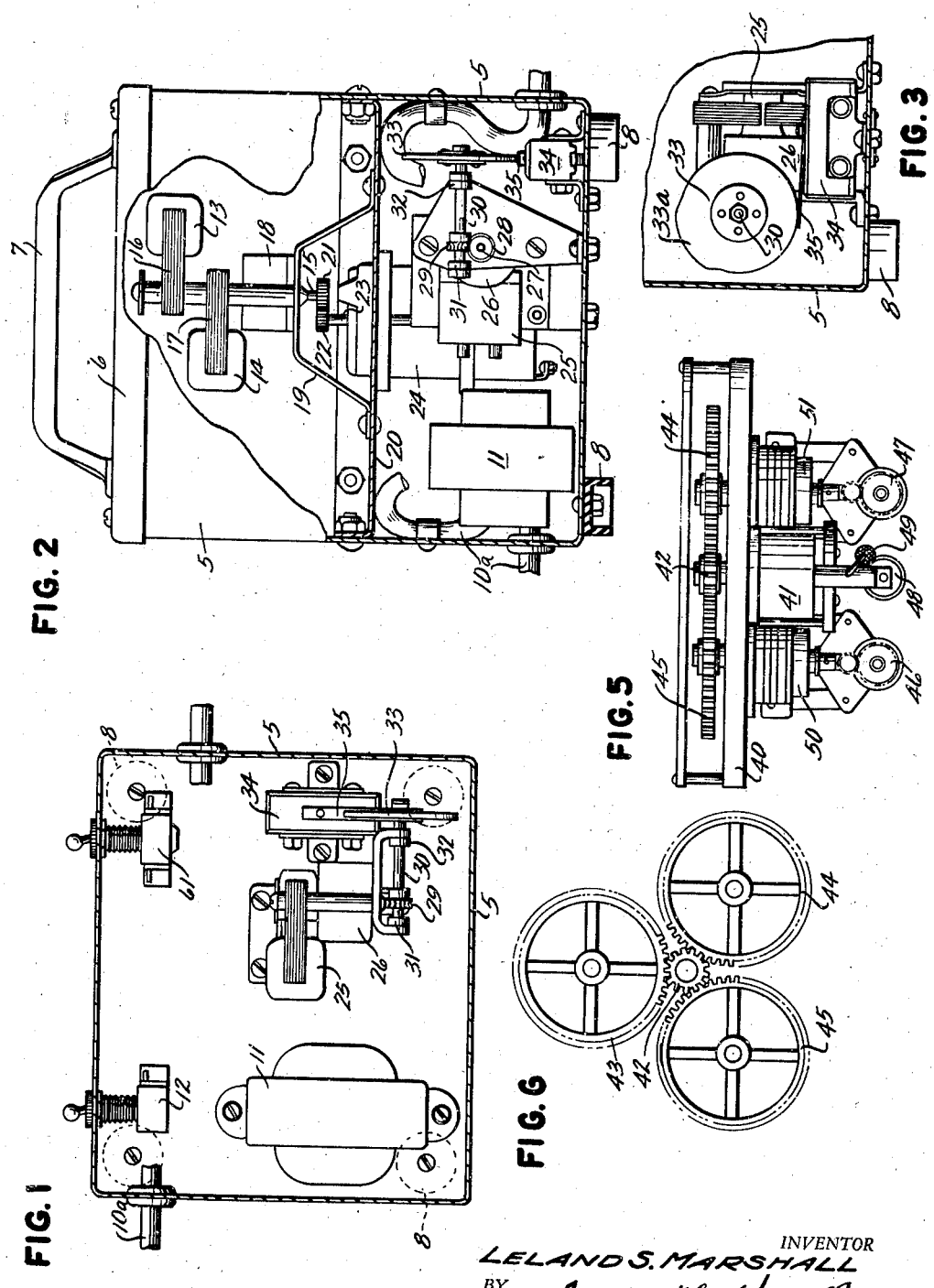

FIG. 1

FIG. 2

FIG. 3

FIG. 5

FIG. 6

INVENTOR
LELAND S. MARSHALL
BY Joseph W. Hazell and Chade Koontz
ATTORNEYS