US010649506B2

(12) **United States Patent**
Siddiqui et al.

(10) **Patent No.: US 10,649,506 B2**
(45) **Date of Patent: May 12, 2020**

(54) **THERMAL DOCK FOR A MOBILE COMPUTING DEVICE**

(71) Applicant: **Microsoft Technology Licensing, LLC**, Redmond, WA (US)

(72) Inventors: **Kabir Siddiqui**, Sammamish, WA (US); **Jedd Perry**, Monroe, WA (US); **Andrew Douglas Delano**, Woodinville, WA (US); **David William Voth**, Woodinville, WA (US)

(73) Assignee: **Microsoft Technology Licensing, LLC**, Redmond, WA (US)

(*) Notice: Subject to any disclaimer, the term of this patent is extended or adjusted under 35 U.S.C. 154(b) by 0 days.

(21) Appl. No.: **16/514,503**

(22) Filed: **Jul. 17, 2019**

(65) **Prior Publication Data**

US 2019/0339750 A1 Nov. 7, 2019

Related U.S. Application Data

(63) Continuation of application No. 15/899,606, filed on Feb. 20, 2018, now Pat. No. 10,386,898.

(60) Provisional application No. 62/462,339, filed on Feb. 22, 2017.

(51) **Int. Cl.**
G06F 1/20 (2006.01)
G06F 1/16 (2006.01)

(52) **U.S. Cl.**
CPC ***G06F 1/203*** (2013.01); ***G06F 1/1632*** (2013.01); ***G06F 1/206*** (2013.01)

(58) **Field of Classification Search**
CPC combination set(s) only.
See application file for complete search history.

(56) **References Cited**

U.S. PATENT DOCUMENTS

5,704,212 A * 1/1998 Erler F25B 21/04 361/679.41
5,974,556 A * 10/1999 Jackson G06F 1/203 713/322
6,094,347 A * 7/2000 Bhatia G06F 1/203 165/104.33
6,109,039 A * 8/2000 Hougham G06F 1/203 62/259.2
6,181,553 B1 * 1/2001 Cipolla G06F 1/1632 165/104.33
6,191,943 B1 * 2/2001 Tracy G06F 1/1632 361/679.46
6,219,233 B1 * 4/2001 Moore G06F 1/1632 361/679.47
6,255,622 B1 * 7/2001 May G06F 1/203 219/201

(Continued)

Primary Examiner — Lisa Lea-Edmonds
(74) *Attorney, Agent, or Firm* — Ray Quinney & Nebeker P.C.; Paul N. Taylor

(57) **ABSTRACT**

Thermal management systems and corresponding use methods are described herein. A thermal management system includes a thermal dock operable to cool a computing device in physical contact with the thermal dock. The thermal dock includes a housing, a first thermal management device supported by the housing, and a second thermal management device physically connected to the first thermal management device. The first thermal management device is a different type of thermal management device than the second thermal management device.
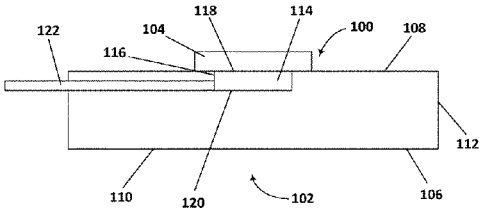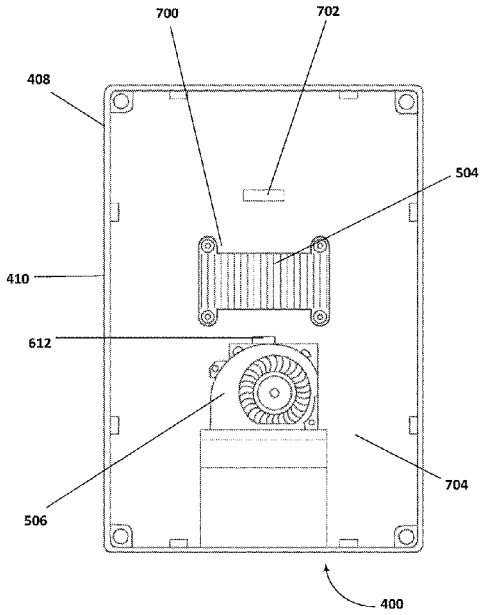
20 Claims, 15 Drawing Sheets