J. D. PEDERSEN.

COMBINED FIRING PIN AND EJECTOR FOR FIREARMS.

APPLICATION FILED OCT. 21, 1908.

936,806. Patented Oct. 12, 1909.

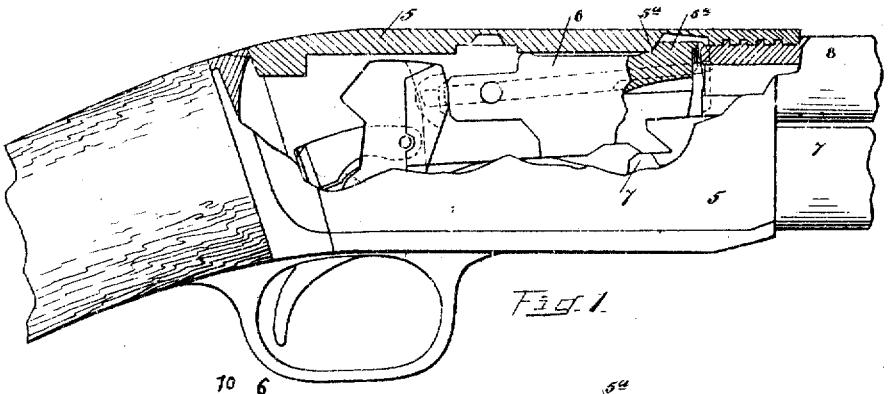

Fig. 1.

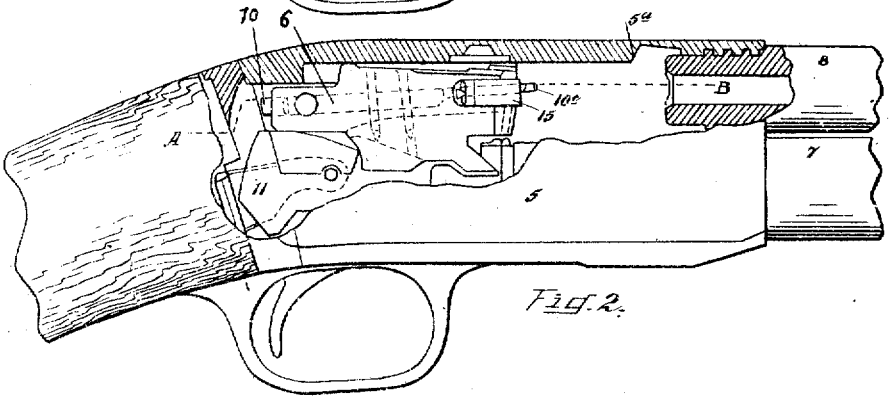

Fig. 2.

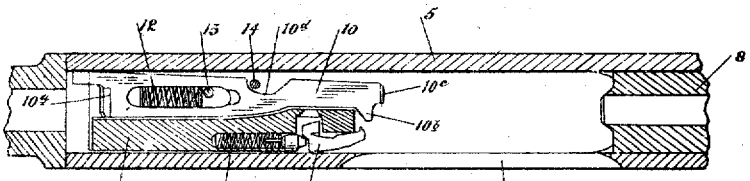

Fig. 3.

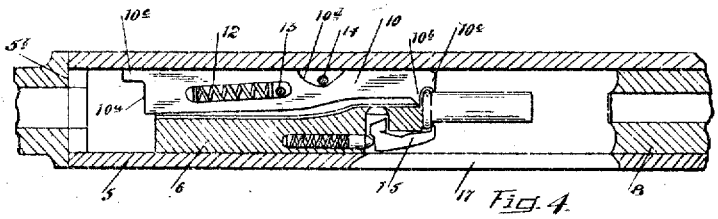

Fig. 4.

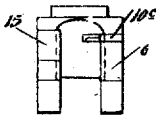

Fig. 5.

Witnesses
Chas. A. Yardell
Sarah E. Clark.

Inventor
JOHN D. PEDERSEN
By Robinson, Martin & Jones
Attorneys