US007228806B2

(12) **United States Patent**
Dueck et al.

(10) **Patent No.: US 7,228,806 B2**
(45) **Date of Patent: Jun. 12, 2007**

(54) **BIOMASS GASIFICATION SYSTEM**

(75) Inventors: **Raymond Dueck**, Arborg (CA); **Maciej G. Wierzbowski**, Winnipeg (CA)

(73) Assignee: **Vidir Machine, Inc.**, Arborg, Manitoba (CA)

(*) Notice: Subject to any disclaimer, the term of this patent is extended or adjusted under 35 U.S.C. 154(b) by 0 days.

(21) Appl. No.: **10/608,443**

(22) Filed: **Jun. 26, 2003**

(65) **Prior Publication Data**

US 2004/0261670 A1 Dec. 30, 2004

(51) **Int. Cl.**
F23D 1/00 (2006.01)
F23G 7/10 (2006.01)
F23G 7/00 (2006.01)

(52) **U.S. Cl.** ..... **110/266**; 110/247; 110/165 R; 110/229

(58) **Field of Classification Search** ..... 110/222, 110/229, 230, 231, 289, 247, 109, 165 R
See application file for complete search history.

(56) **References Cited**

U.S. PATENT DOCUMENTS

1,709,902 A * 4/1929 Fahnestock 110/277
1,888,439 A * 11/1932 Stolte 110/191
2,171,535 A * 9/1939 Ragnar et al. 110/225
2,375,436 A * 5/1945 Gustav ..... 110/165 R
2,971,480 A * 2/1961 Sage 110/265
4,014,664 A * 3/1977 Kupfer et al. 48/63
4,498,909 A * 2/1985 Milner et al. 48/209
4,846,082 A * 7/1989 Marangoni 110/234
4,971,599 A * 11/1990 Cordell et al. 48/76
5,022,329 A * 6/1991 Rackley et al. 110/234
5,026,403 A * 6/1991 Michel-Kim 48/203
5,197,684 A * 3/1993 Bihlet et al. 241/283
5,823,122 A * 10/1998 Chronowski et al. 110/346

* cited by examiner

Primary Examiner—Kenneth Rinehart
(74) *Attorney, Agent, or Firm*—Michael S. Neustel

(57) **ABSTRACT**

A biomass gasification system for efficiently extracting heat energy from biomass material. The biomass gasification system includes a primary combustion chamber, a rotating grate within the primary combustion chamber for supporting the biomass during gasification, a feeder unit in communication with the primary combustion chamber for delivering biomass, a secondary combustion chamber fluidly connected to the primary combustion chamber, an oxygen mixer positioned between the primary combustion chamber and the secondary combustion chamber, a heat exchanger and an exhaust stack.
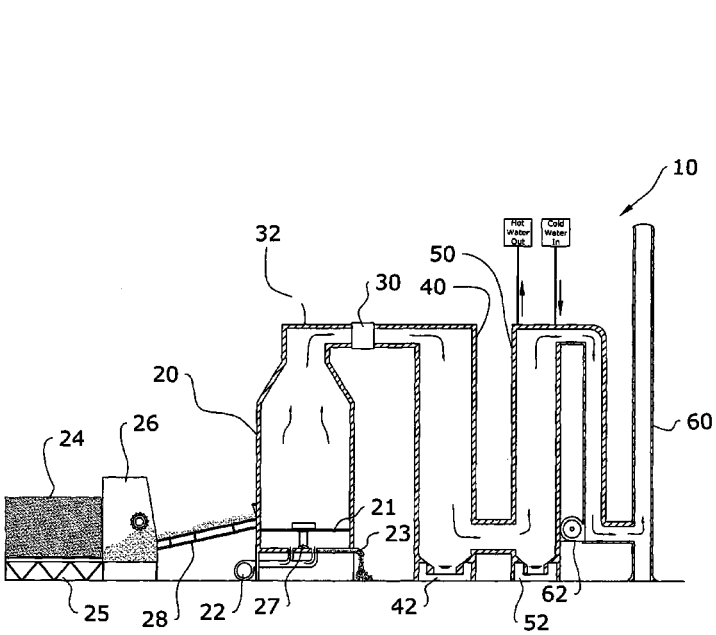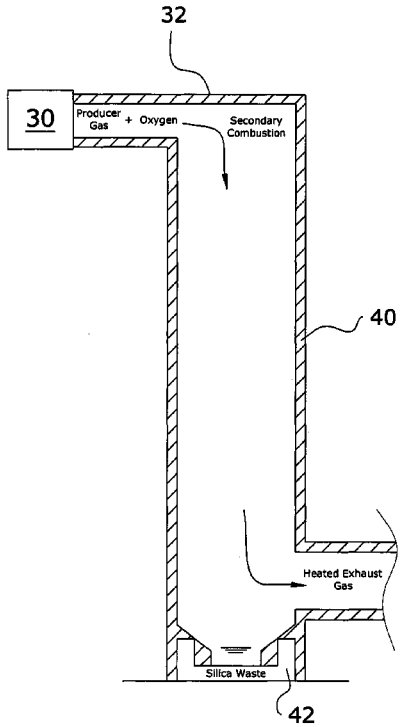
2 Claims, 10 Drawing Sheets