A. H. PARKER.

HEATING FURNACE.

APPLICATION FILED JULY 9, 1918.

1,325,905.

Patented Dec. 23, 1919.

2 SHEETS—SHEET 1.

Fig. 1.

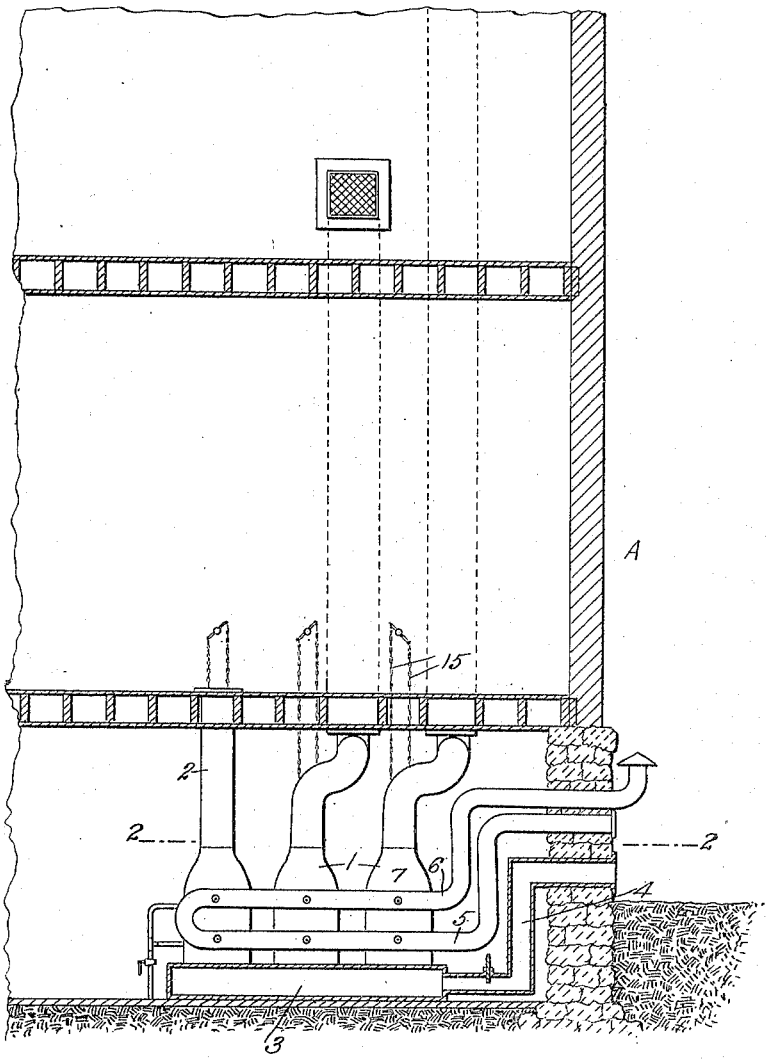

Fig. 2.

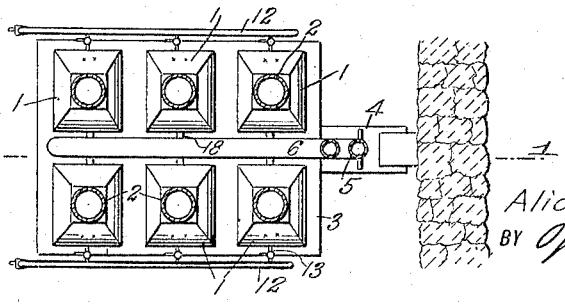

WITNESSES

H. T. Walker

C. Bradway

INVENTOR

Alice H. Parker

BY Munn & Co.

ATTORNEYS