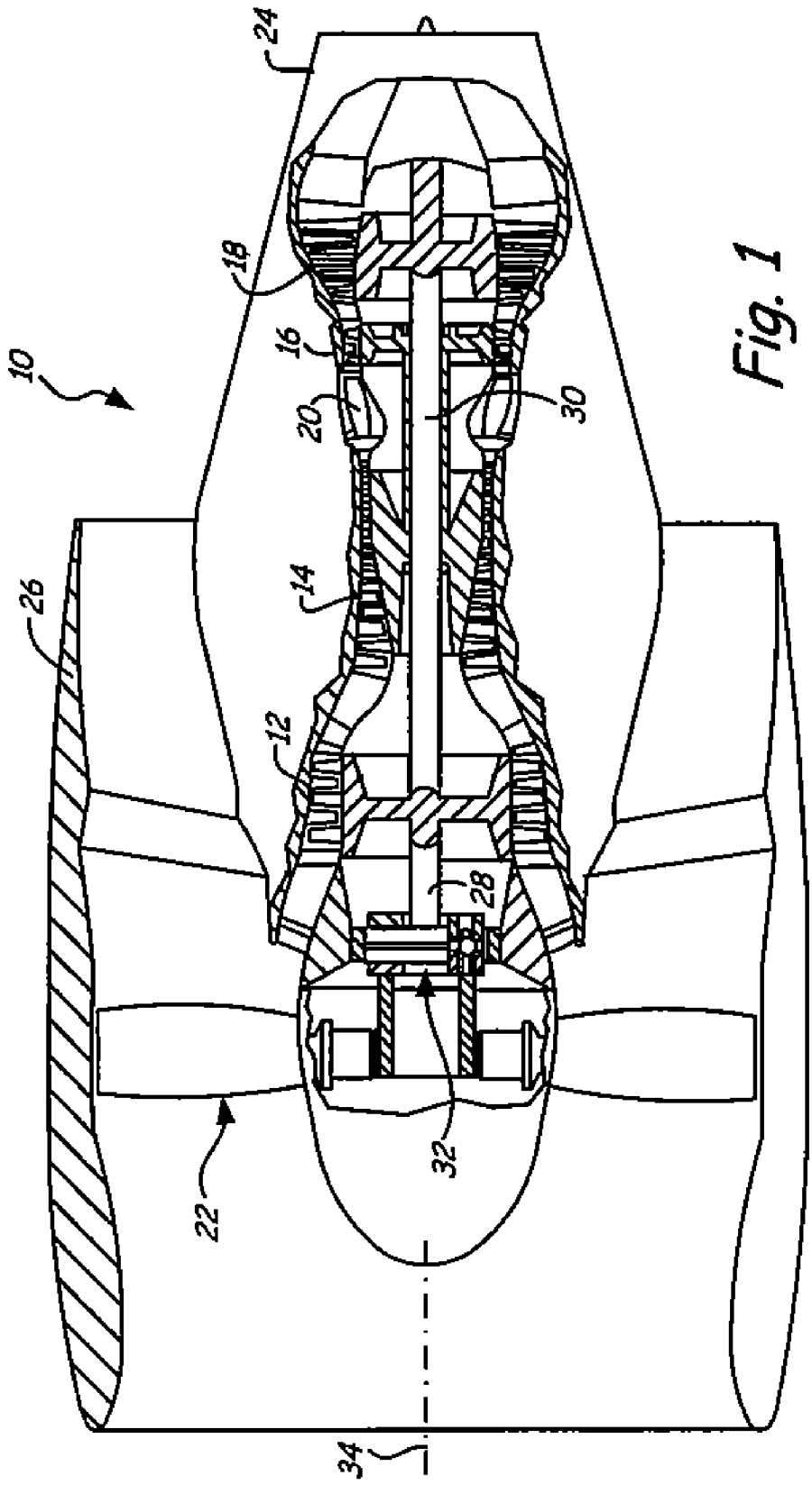

Fig. 1
PRIOR ART