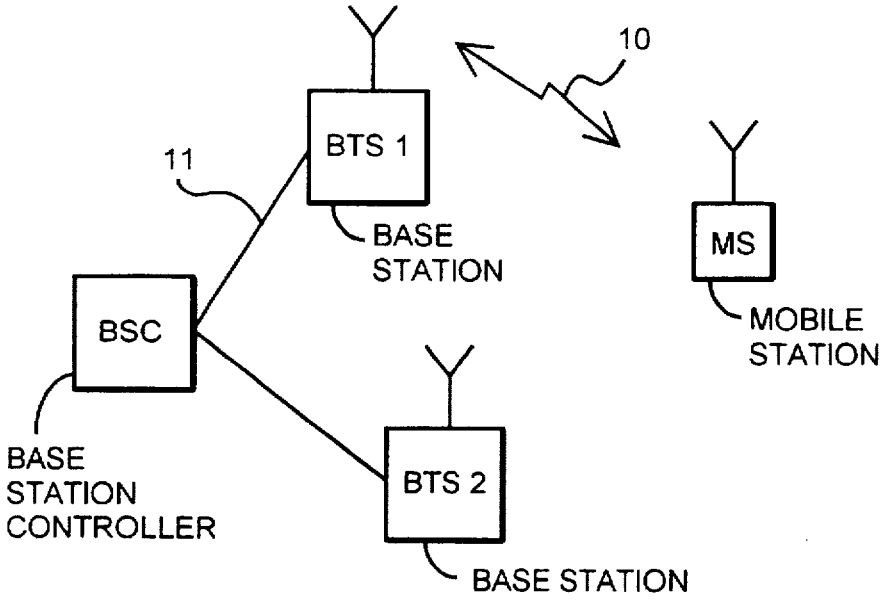
10
BTS 1
11
BASE
STATION
MS
MOBILE
STATION
BSC
BASE
STATION
CONTROLLER
BTS 2
BASE STATION

Fig. 1

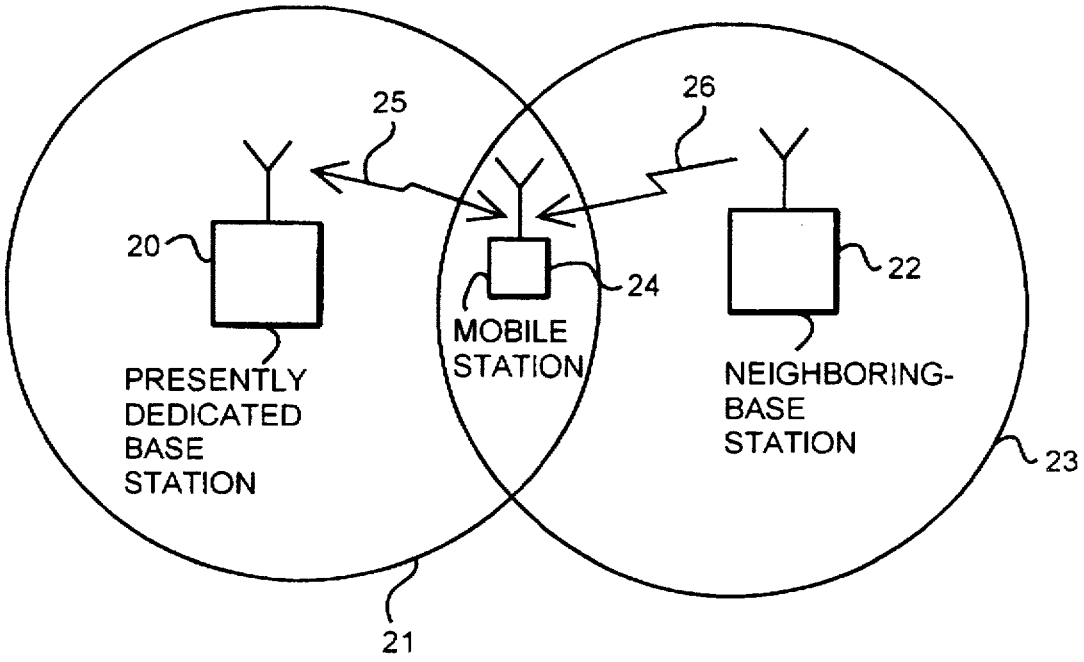
25
26
20
24
22
MOBILE
STATION
PRESENTLY
DEDICATED
BASE
STATION
NEIGHBORING-
BASE
STATION
23
21

Fig. 2