No. 793,604. PATENTED JUNE 27, 1905.

W. E. NICKERSON.

ABRADING MACHINE.

APPLICATION FILED MAR. 18, 1902.

4 SHEETS—SHEET 1.

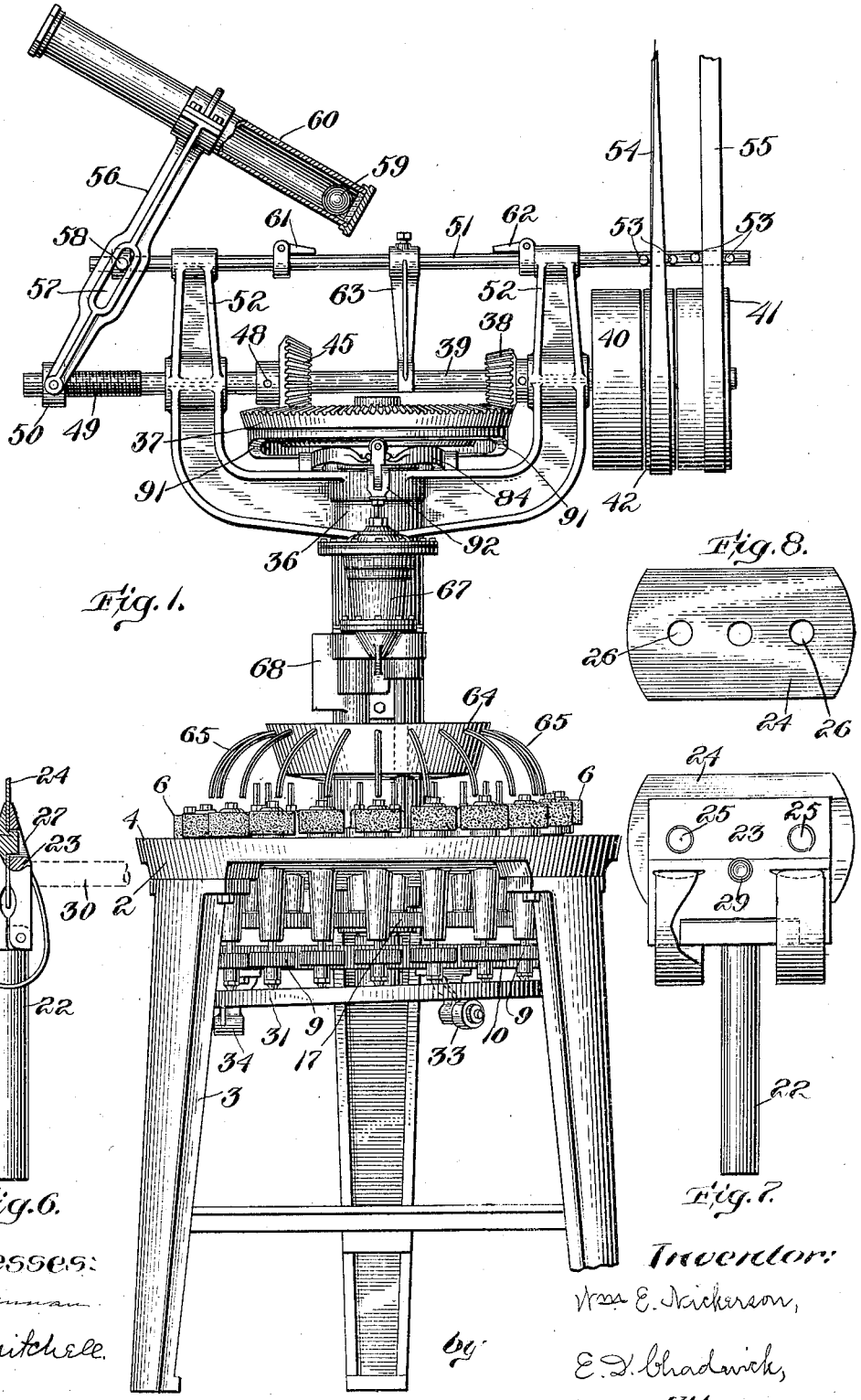

Fig. 1.

Fig. 8.

Fig. 6.

Fig. 7.

Witnesses:

C. F. Brennan

O. R. Mitchell.

Inventor:

Wm. E. Nickerson,

by E. D. Chadwick,

Attorney.

PHOTO-LITHOGRAPHED BY SACKETT & WILHELMS LITHO. & PTG. CO. NEW YORK.