US009584204B2

(12) United States Patent
Baldemair et al.

(10) Patent No.: US 9,584,204 B2
(45) Date of Patent: Feb. 28, 2017

(54) **TRANSMITTER FOR TRANSMITTING DISCOVERY SIGNALS, A RECEIVER AND METHODS THEREIN**

(71) Applicant: **Telefonaktiebolaget L M Ericsson (publ)**, Stockholm (SE)

(72) Inventors: **Robert Baldemair**, Solna (SE); **Kumar Balachandran**, Pleasanton, CA (US); **Dennis Hui**, Sunnyvale, CA (US)

(73) Assignee: **Telefonaktiebolaget L M Ericsson (publ)**, Stockholm (SE)

(*) Notice: Subject to any disclaimer, the term of this patent is extended or adjusted under 35 U.S.C. 154(b) by 57 days.

(21) Appl. No.: **14/408,321**

(22) PCT Filed: **Sep. 18, 2012**

(86) PCT No.: **PCT/SE2012/050984**
§ 371 (c)(1),
(2) Date: **Dec. 16, 2014**

(87) PCT Pub. No.: **WO2014/007713**
PCT Pub. Date: **Jan. 9, 2014**

(65) **Prior Publication Data**

US 2015/0117435 A1 Apr. 30, 2015

Related U.S. Application Data

(60) Provisional application No. 61/668,465, filed on Jul. 6, 2012.

(51) **Int. Cl.**

H04W 48/16	(2009.01)
H04B 7/06	(2006.01)
H04W 8/00	(2009.01)
H04J 1/06	(2006.01)

(52) **U.S. Cl.**
CPC ***H04B 7/06*** (2013.01); ***H04W 8/005*** (2013.01); ***H04W 48/16*** (2013.01); *H04J 1/06* (2013.01)

(58) **Field of Classification Search**
None
See application file for complete search history.

(56) **References Cited**

U.S. PATENT DOCUMENTS

2006/0240780	A1*	10/2006	Zhu et al.	455/63.4
2009/0086619	A1*	4/2009	Santhoff	H04B 1/7163 370/208
2011/0149798	A1*	6/2011	Cordeiro	H04W 8/005 370/254
2011/0205969	A1	8/2011	Ahmad et al.	
2013/0122893	A1*	5/2013	Turtinen et al.	455/423
2013/0229928	A1*	9/2013	Lipman et al.	370/252

FOREIGN PATENT DOCUMENTS

WO	2008033985	A2	3/2008
WO	2008075264	A2	6/2008
WO	2008087595	A2	7/2008

* cited by examiner

Primary Examiner — Chi H Pham
Assistant Examiner — Shick Hom
(74) *Attorney, Agent, or Firm* — Coats & Bennett, P.L.L.C.

(57) **ABSTRACT**

A transmitter and a method therein for transmitting discovery signals to a receiver. The transmitter and the receiver arc comprised in a radio communications system. The transmitter transmits two or more discovery signals over two or more directions. Each discovery signal is configured to span over a fraction of a carrier bandwidth.
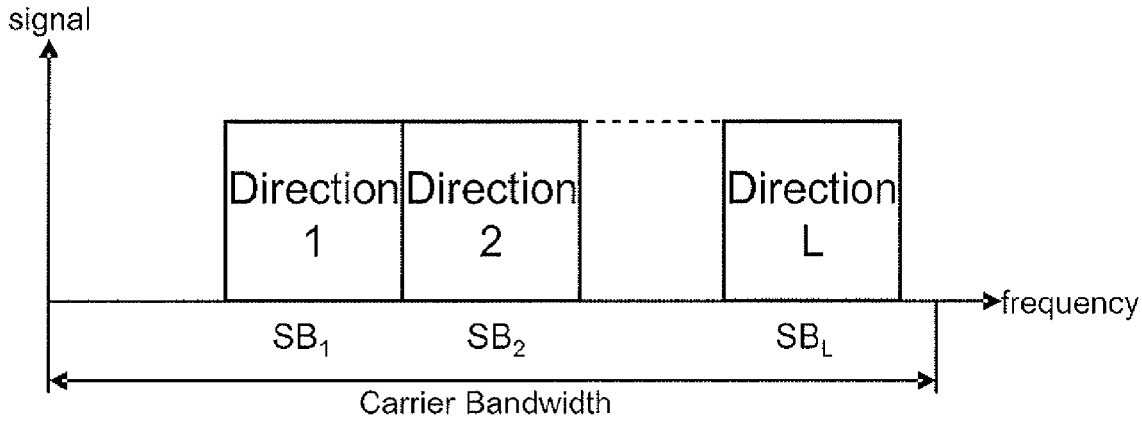
29 Claims, 10 Drawing Sheets