Sept. 5, 1944. M. C. BALSAMO 2,357,304

ANTISPIN ATTACHMENT FOR LINK TRAINERS

Filed Aug. 5, 1943 2 Sheets-Sheet 1

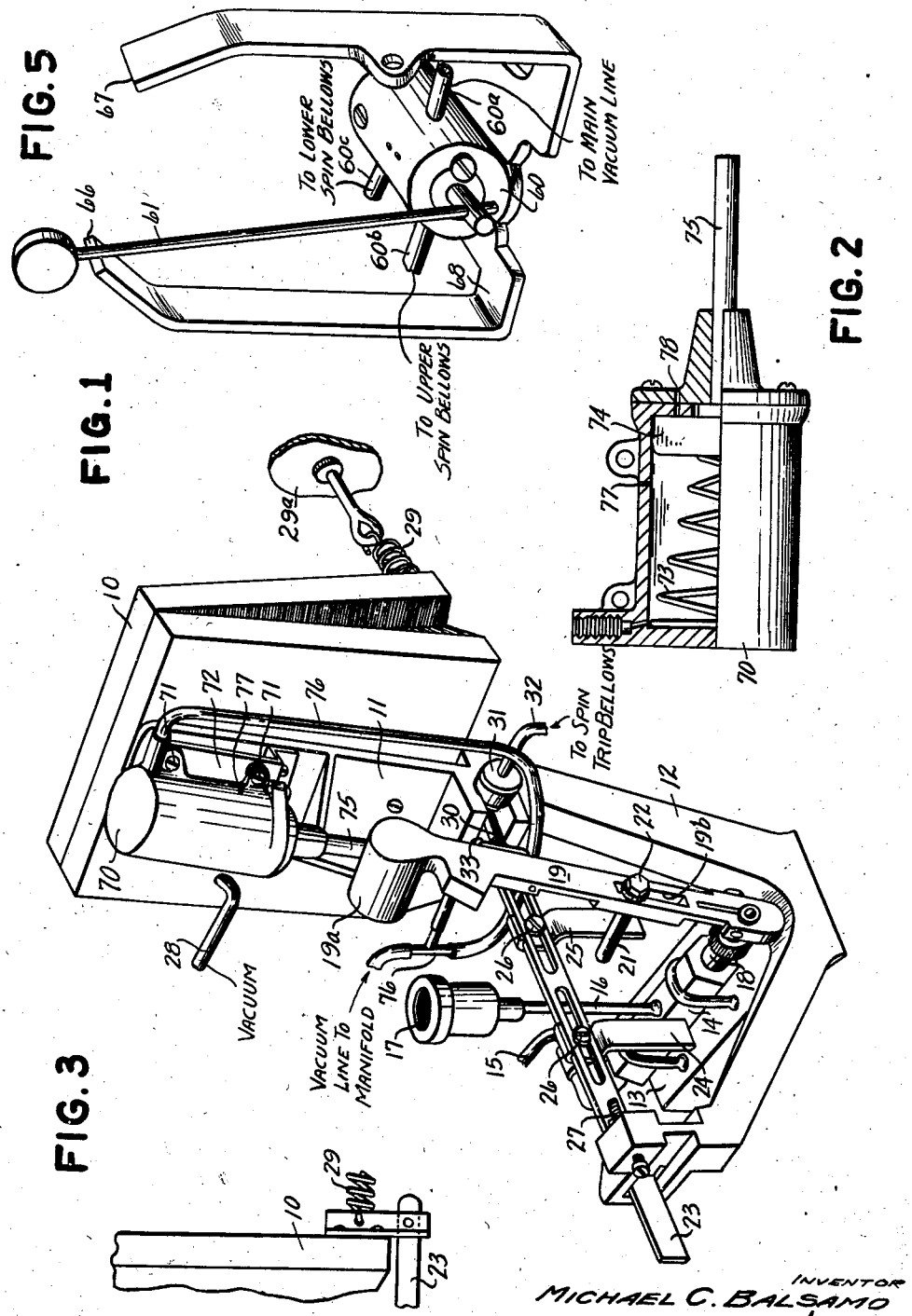

INVENTOR
MICHAEL C. BALSAMO
BY Joseph Ch. Hoagell and Clade Koontz
ATTORNEYS