(Model.)

F. & O. F. KAMPFE.

Safety Razor.

No. 228,904. **Patented June 15, 1880.**

Fig. 1.

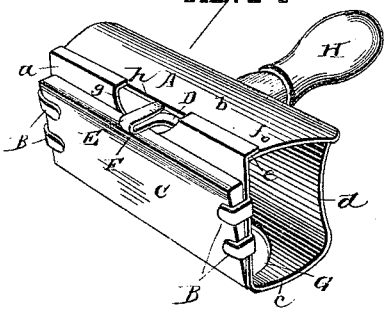

Fig. 2.

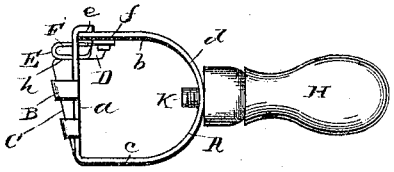

Fig. 3.

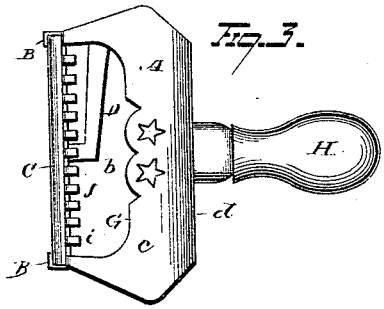

Fig. 4.

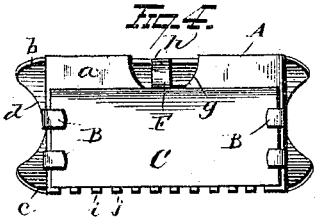

Fig. 5.

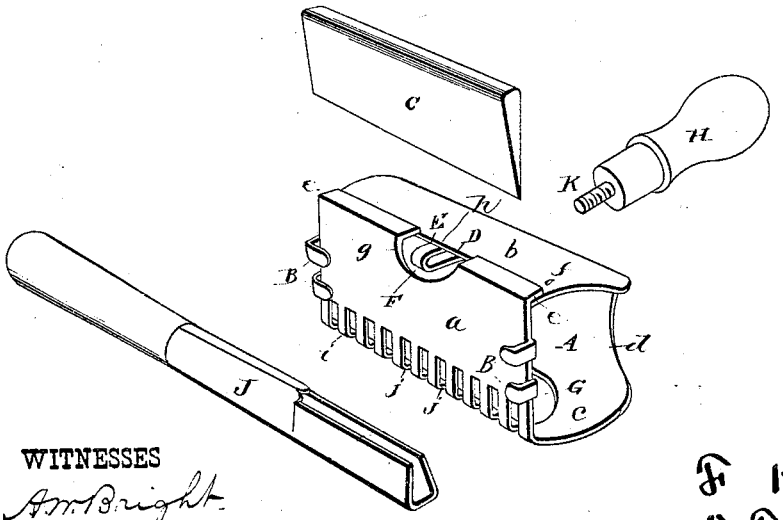

WITNESSES

A. M. Bright

A. L. Lawrence

INVENTORS

F. Kampfe.

O. F. Kampfe.

By Leggett & Leggett ATTORNEY

N. PETERS, PHOTO-LITHOGRAPHER, WASHINGTON, D. C.