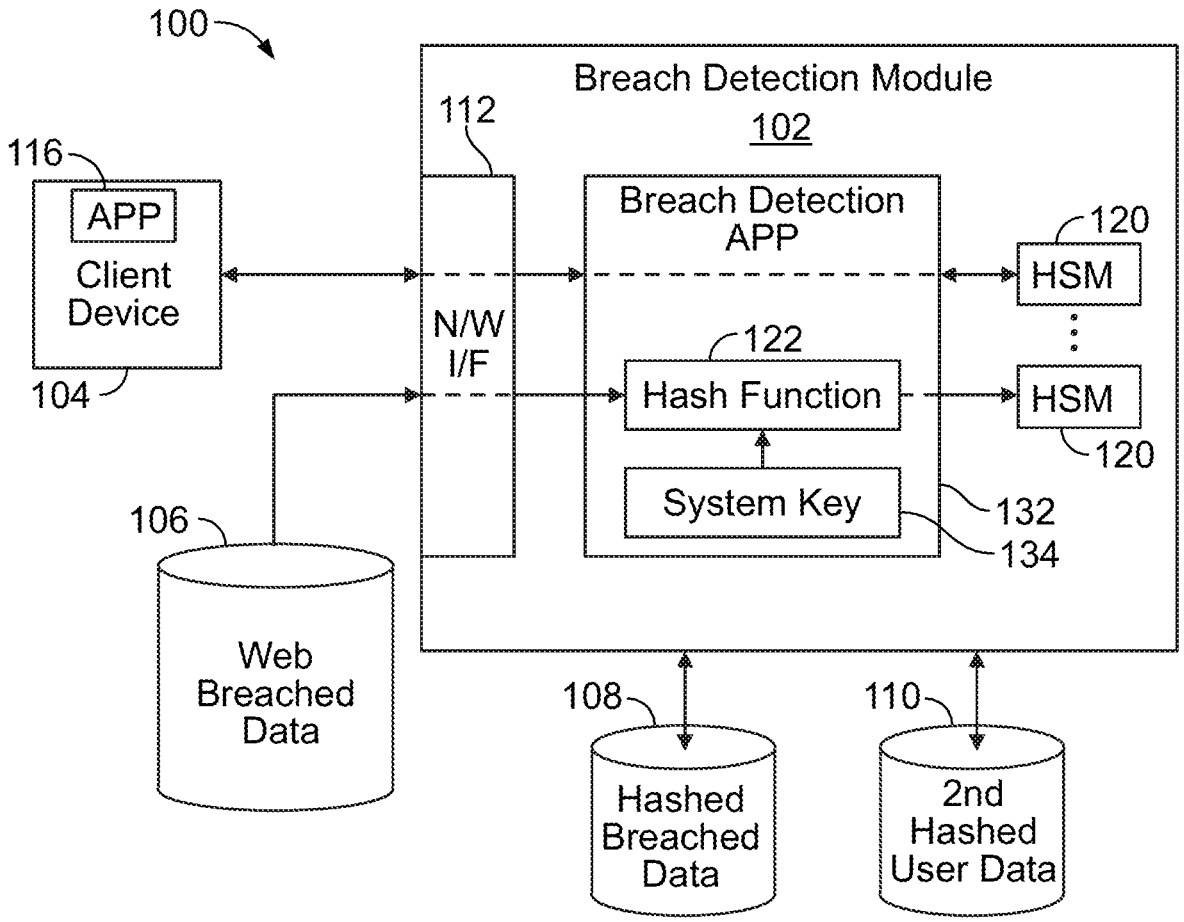
100
Breach Detection Module
102
112
116
APP
Client Device
104
N/W I/F
Breach Detection APP
122
Hash Function
System Key
132
134
120
HSM
HSM
120
106
Web Breached Data
108
Hashed Breached Data
110
2nd Hashed User Data

FIG. 1