April 25, 1950 J. R. CLARK ET AL 2,505,604

DROPPABLE WING TIP TANK

Filed Feb. 1, 1947 3 Sheets-Sheet 1

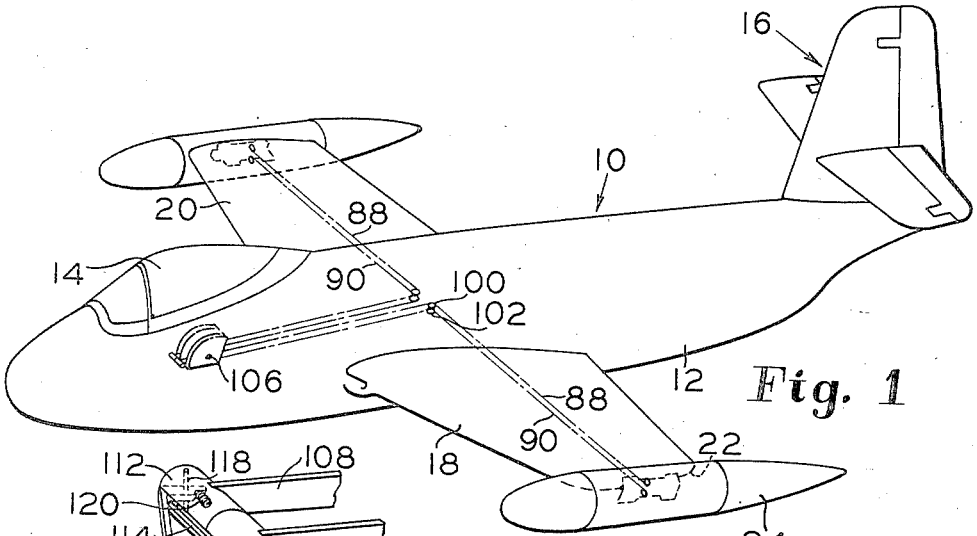

Fig. 1

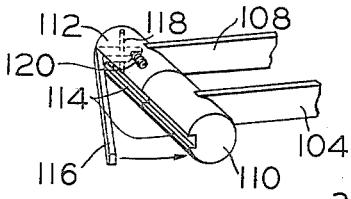

Fig. 7

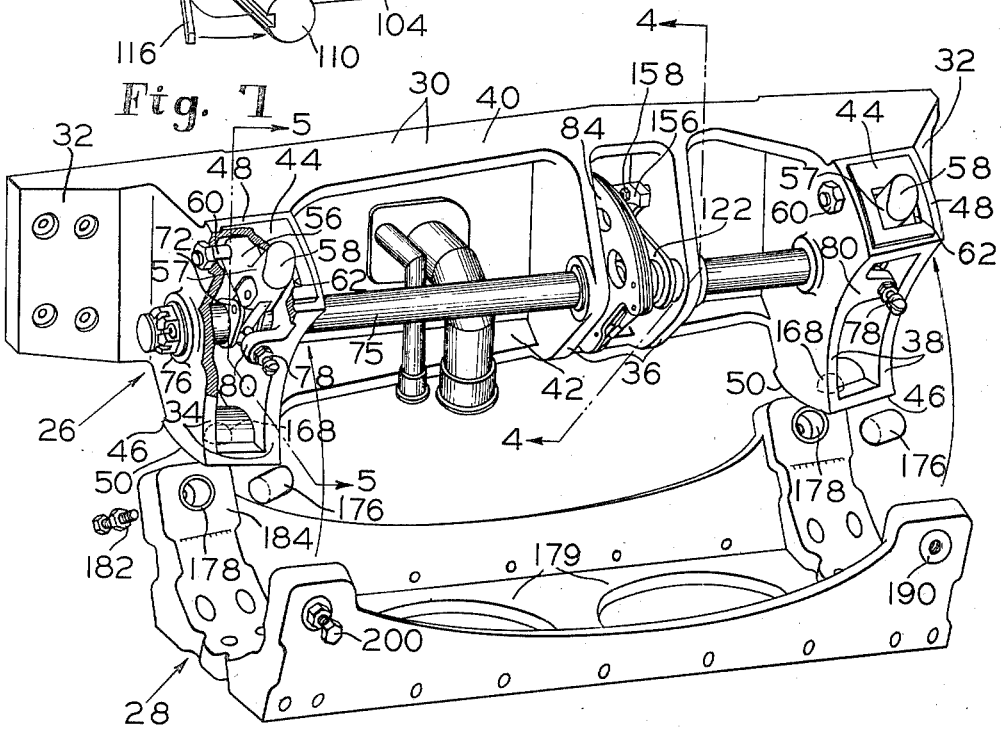

Fig. 3

INVENTORS
J. R. Clark
D. L. Mc Farland

BY M. B. Tasker
ATTORNEY