May 22, 1923. 1,455,802

C. NESSLER

DEVICE FOR WAVING NATURAL HAIR

Filed Oct. 5, 1921

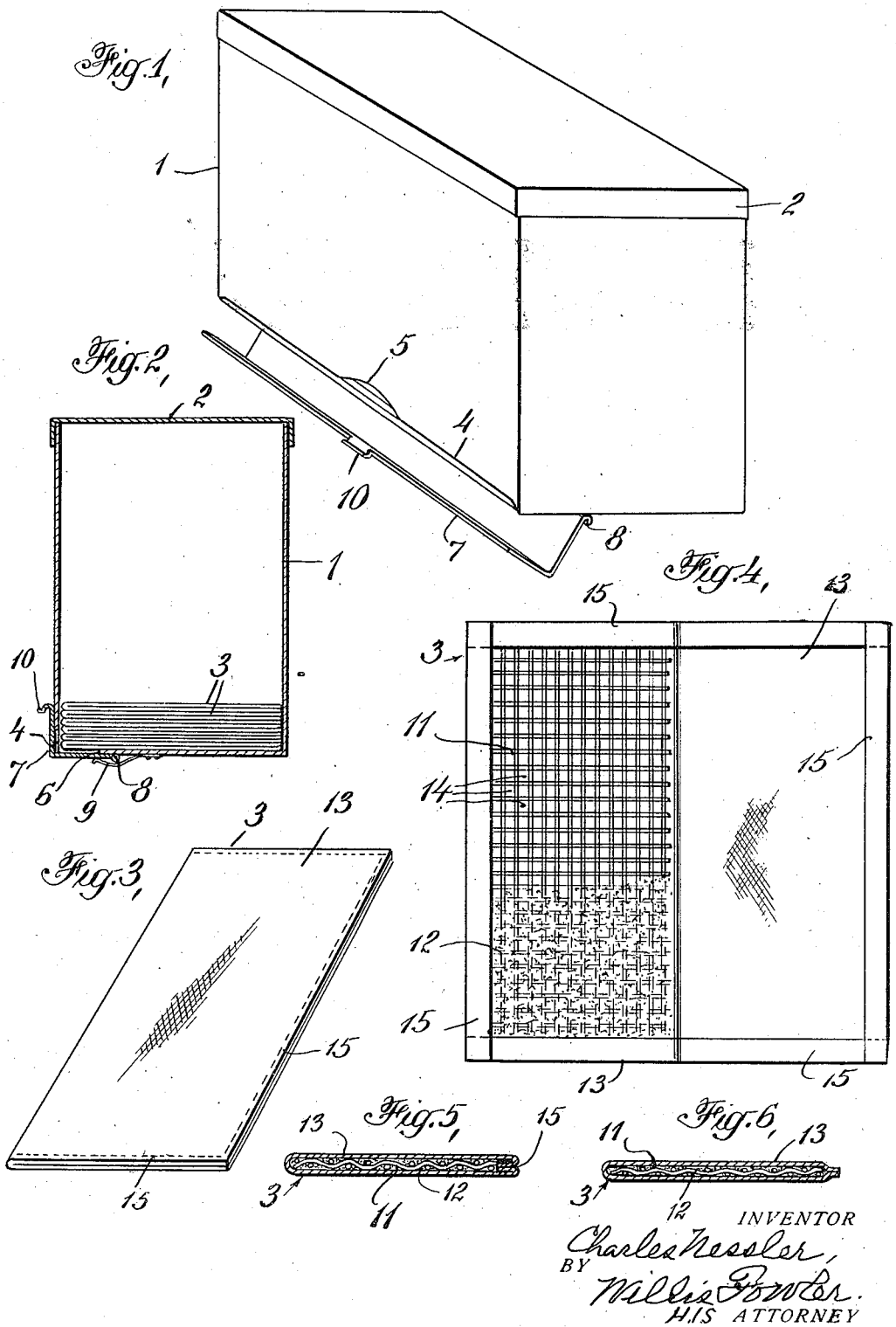

INVENTOR
Charles Nessler,
BY
Willis Fowler.
HIS ATTORNEY