Feb. 3, 1948. G. L. LANG 2,435,502

RADIO SIGNALING MEANS FOR AVIATION TRAINERS

Filed April 29, 1942 5 Sheets-Sheet 1

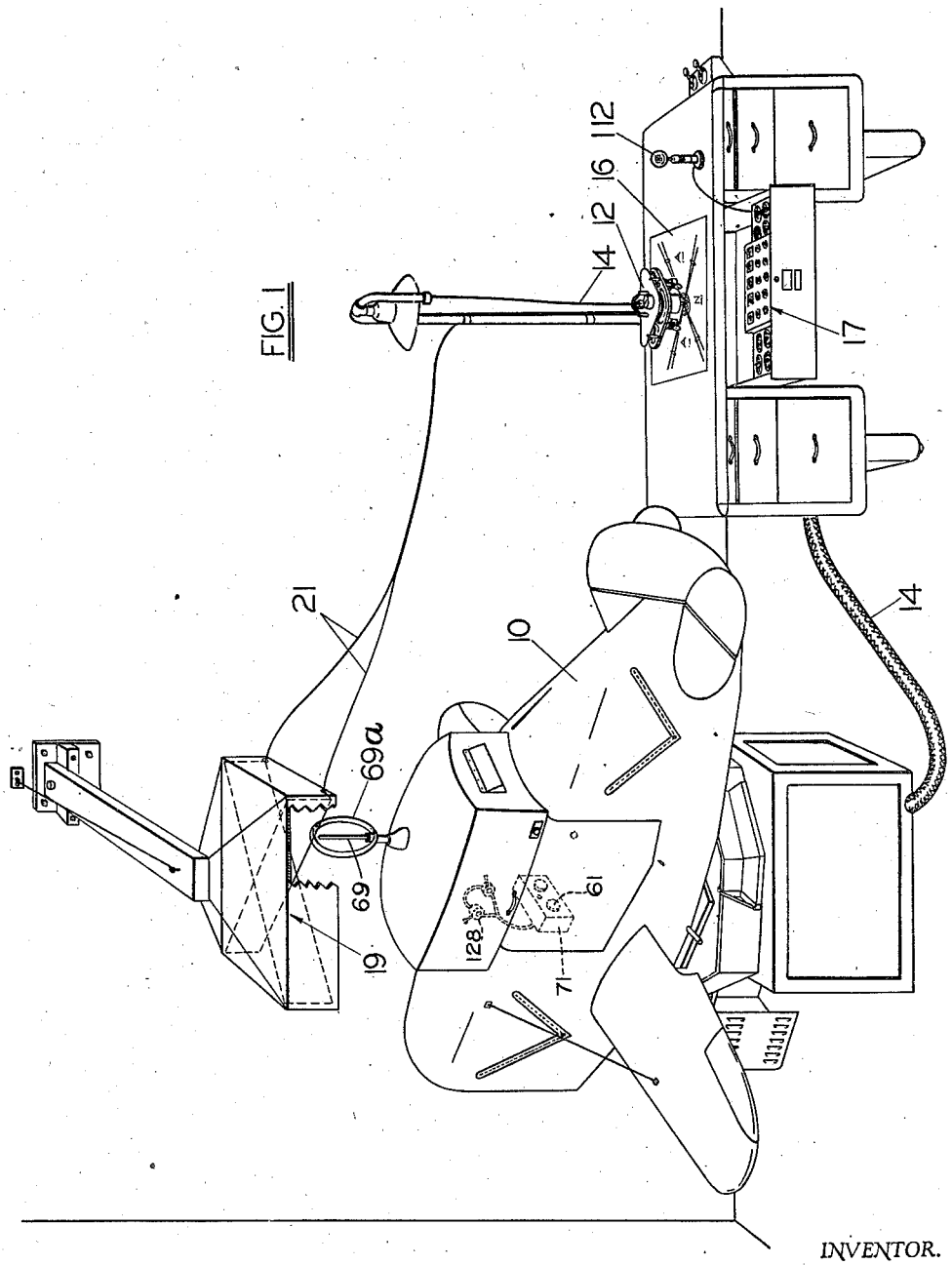

INVENTOR.
GREGOR L. LANG
BY Donald V. Heller
ATTORNEY.