Fig. 1.

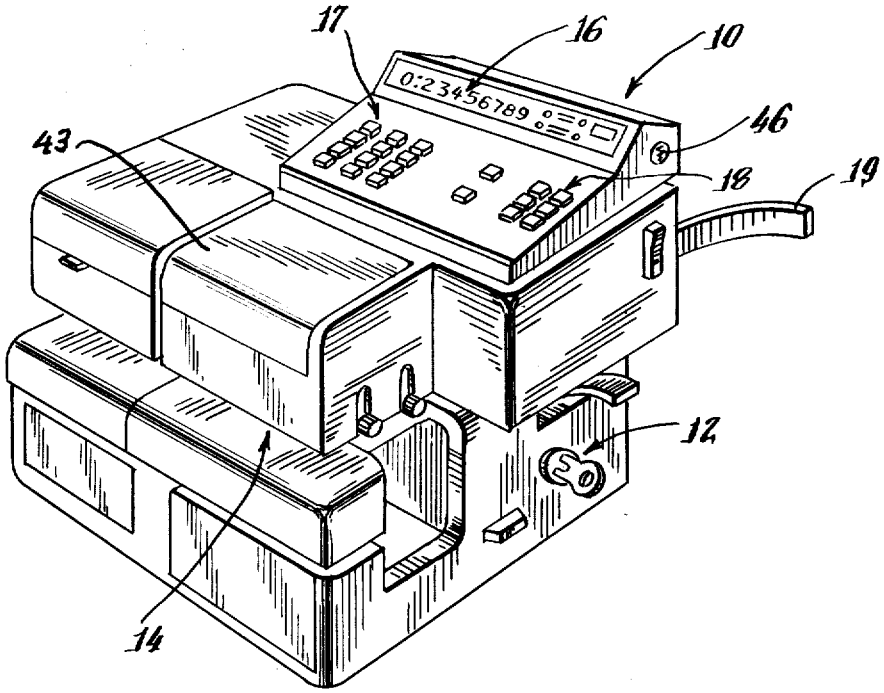
17
16
10
0:23456789
46
43
18
19
12
14

Fig. 2.

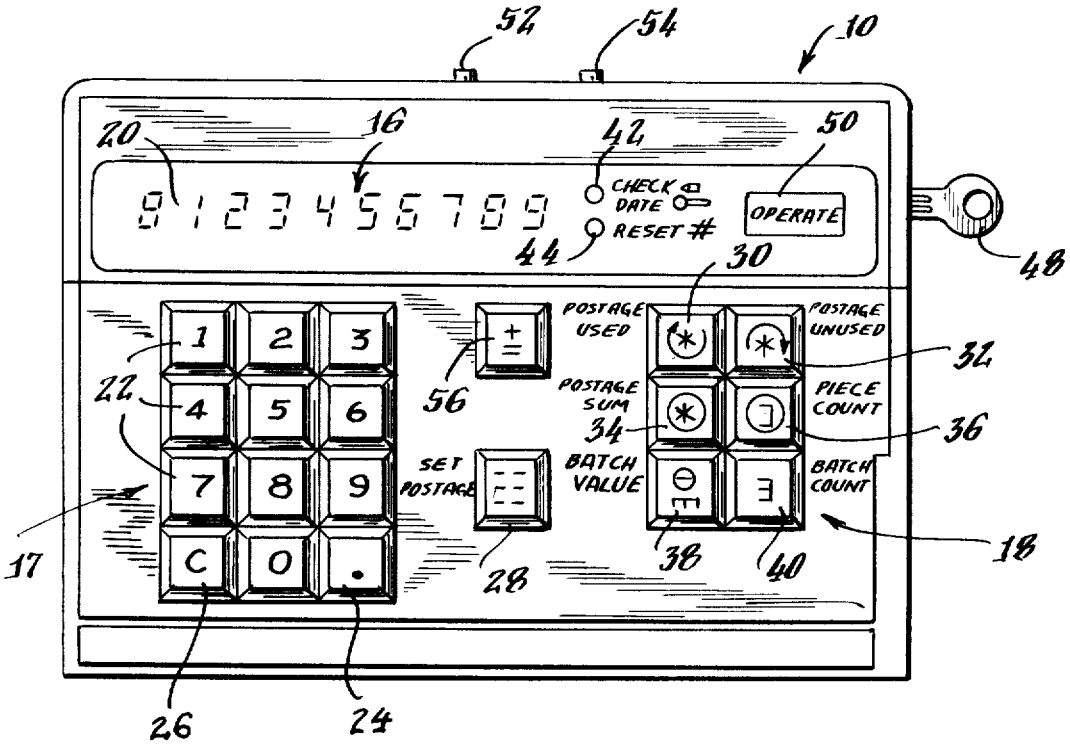
52
54
10
20
16
42
50
0123456789
CHECK DATE
RESET #
OPERATE
44
48
30
POSTAGE USED
POSTAGE UNUSED
1
2
3
22
4
5
6
56
POSTAGE SUM
PIECE COUNT
32
34
36
7
8
9
SET POSTAGE
BATCH VALUE
BATCH COUNT
17
C
0
.
28
38
40
18
26
24