US007140701B2

(12) **United States Patent**
Arent et al.

(10) **Patent No.: US 7,140,701 B2**
(45) **Date of Patent: Nov. 28, 2006**

(54) **MODULAR WORKBENCH SYSTEM**

(75) Inventors: **Thomas Wesley Arent**, St. Joseph, MI (US); **Todd Christopher Starr**, St. Joseph, MI (US); **Allan Ray Steinkuhl**, Evansville, IN (US); **Mark Allen Stout**, Evansville, IN (US); **John Richard Wisnoski**, Haubstadt, IN (US); **Kenneth L. Patricio**, Evansville, IN (US)

(73) Assignee: **Whirlpool Corporation**, Benton Harbor, MI (US)

(*) Notice: Subject to any disclaimer, the term of this patent is extended or adjusted under 35 U.S.C. 154(b) by 17 days.

(21) Appl. No.: **11/048,435**

(22) Filed: **Feb. 1, 2005**

(65) **Prior Publication Data**

US 2005/0127799 A1 Jun. 16, 2005

Related U.S. Application Data

(63) Continuation of application No. 10/334,078, filed on Dec. 30, 2002, now Pat. No. 6,926,376.

(51) **Int. Cl.**
A47B 97/00 (2006.01)

(52) **U.S. Cl.** **312/249.9**; 312/249.1; 312/223.3; 312/223.6; 108/50.01

(58) **Field of Classification Search** 312/257.1, 312/249.9, 204, 140.1, 140.3, 223.3, 223.6, 312/249.1, 194; 108/27, 50.02, 153.1, 158, 108/50.01, 91–93

See application file for complete search history.

(56) **References Cited**

U.S. PATENT DOCUMENTS

2,981,577	A *	4/1961	Trautmann	108/27
3,968,606	A *	7/1976	Facemire	52/127.6
4,002,383	A *	1/1977	Holloway, Jr.	312/209
4,050,752	A *	9/1977	Dykstra	312/243
4,745,867	A *	5/1988	Niemiec	108/158
5,024,167	A *	6/1991	Hayward	108/50.02
5,053,931	A *	10/1991	Rushing	362/102
5,094,174	A *	3/1992	Grund et al.	108/153.1
5,666,887	A *	9/1997	Grabowski et al.	108/91
5,806,942	A *	9/1998	Jenkins et al.	312/204
5,927,214	A *	7/1999	Schwartz et al.	108/128
5,942,984	A *	8/1999	Toms et al.	340/3.5
6,196,140	B1 *	3/2001	Newhouse et al.	108/50.01

* cited by examiner

Primary Examiner—Rodney B. White
Assistant Examiner—Erika Garrett
(74) *Attorney, Agent, or Firm*—Stephen Krefman; Robert O. Rice; John F. Colligan

(57) **ABSTRACT**

A heavy-duty workbench with strong metal legs and a thick hardwood top. The workbench can provide docking space for three modules that can function as an additional work surface when pulled out from under the workbench or when used alone. The workbench and modules are designed for use in non-climate controlled spaces such as a garage where temperature and humidity extremes are common. Electrical outlets can be provided in an optional backsplash mounted at the rear edge of the workbench.
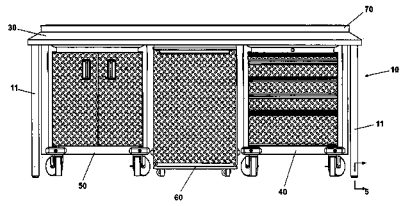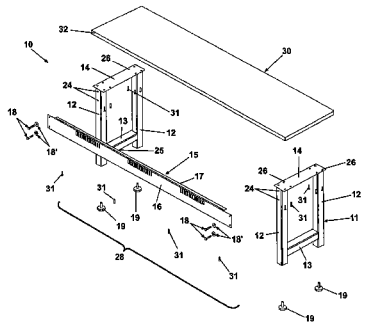
7 Claims, 9 Drawing Sheets