United States Patent [19]

Myer

[11] **Patent Number: 4,636,801**

[45] **Date of Patent: Jan. 13, 1987**

[54] **MULTIPLE REFLECTOR SYSTEM WITH DIELECTRIC SUPPORT WEBS AND FOAM BODY**

[75] Inventor: **Jon H. Myer**, Woodland Hills, Calif.

[73] Assignee: **Hughes Aircraft Company**, Los Angeles, Calif.

[21] Appl. No.: **486,143**

[22] Filed: **Apr. 18, 1983**

[51] **Int. Cl.**[4] **H01Q 1/12**

[52] **U.S. Cl.** ..... **343/781 CA**; 343/912

[58] **Field of Search** ..... 343/781 CA, 781 P, 840, 343/912, 878, 885, 887, 915

[56] **References Cited**

U.S. PATENT DOCUMENTS

2,895,131	7/1959	Butler	343/840
2,940,078	6/1960	Bodmer et al.	343/840
2,945,233	7/1960	Wild et al.	343/840
3,296,685	1/1967	Suliteanu	343/912
3,374,482	3/1968	Kielman	343/912
3,407,404	10/1968	Cook et al.	343/765
3,438,045	4/1969	Braccini	343/781 CA
3,983,560	9/1976	MacDougall	343/781 CA

FOREIGN PATENT DOCUMENTS

474214	10/1937	United Kingdom .	
1162312	8/1969	United Kingdom	343/781 CA
2081023	2/1982	United Kingdom .	

OTHER PUBLICATIONS

Japan Electronic Engineering, No. 38, Jan. 1970, Dempa (Tokyo, JP), T. Kitsuregawa: "Recent Parabolic Antenna Techniques".

Telecommunications and Radio Engineering, vol. 34, No. 12, Dec. 1979 (Silver Spring, Maryland, US) A. M. Pokras: "Satellite Communication Ground Station Antennas".

1968 International Antenna and Propagation Symposium, Boston, Digest, IEEE (New York, US), P. Mikulich et al: A High Gain Cassegrain Monopulse Antenna".

Primary Examiner—Eli Lieberman
Assistant Examiner—Michael C. Wimer
Attorney, Agent, or Firm—V. D. Duraiswamy; A. W. Karambelas

[57] **ABSTRACT**

Antenna structure **10** has a primary reflective surface **12** over which is positioned a subreflector surface **14.** Support webs **32, 34** and **36** are made of low dielectric loss insulating material and are adhesively secured in slots in the reflectors. The support webs are positioned on planes through the axis so that the small thickness of the webs is in the projected area and results in an unobstructed and undistorted electromagnetic radiation pattern. The webs firmly support the subreflector in the desired position. The antenna can be configured as a Gregorian system as shown or alternatively as a Cassegrainian system.
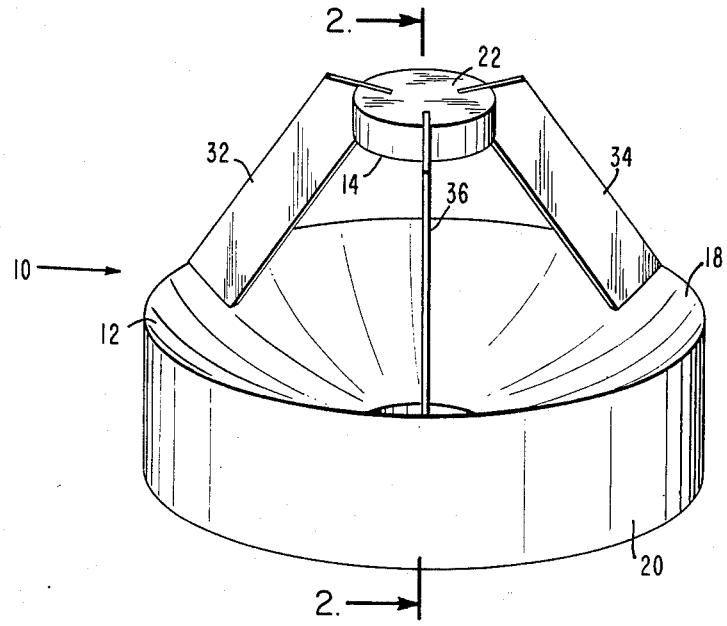
6 Claims, 3 Drawing Figures