BEST COPY AVAILABLE

J. Ruggles.
Traction Wheels.
No 1. Patented Jul. 13 1836

Fig. 1.

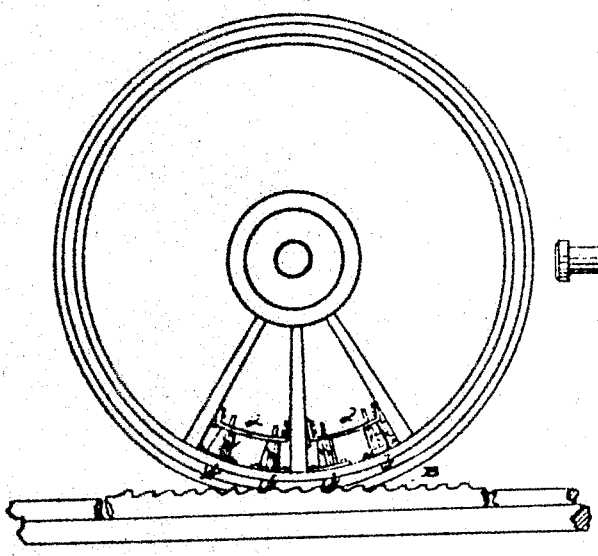

Fig. 3.

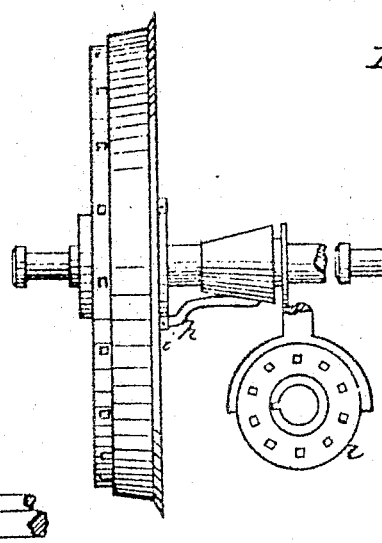

Fig. 2.

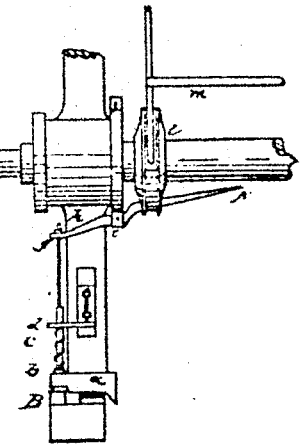

Fig. 7.

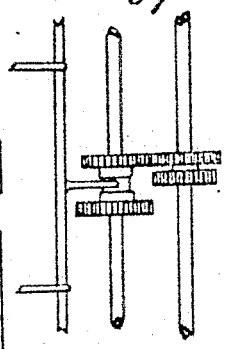

Fig. 4.

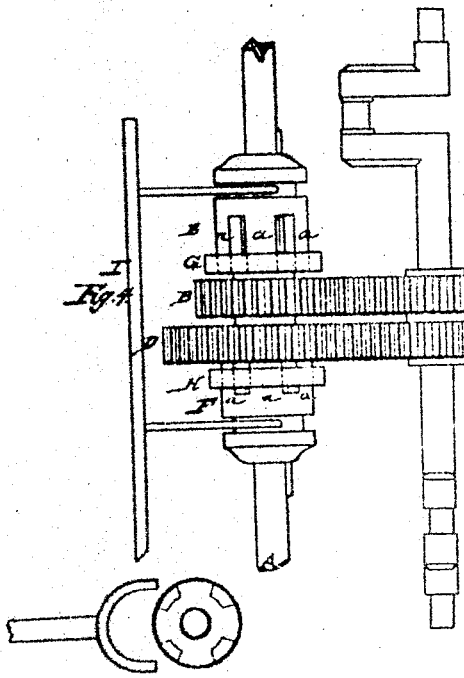

Fig. 5.

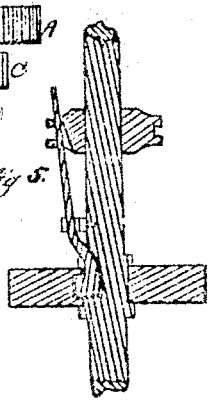

Fig. 6.

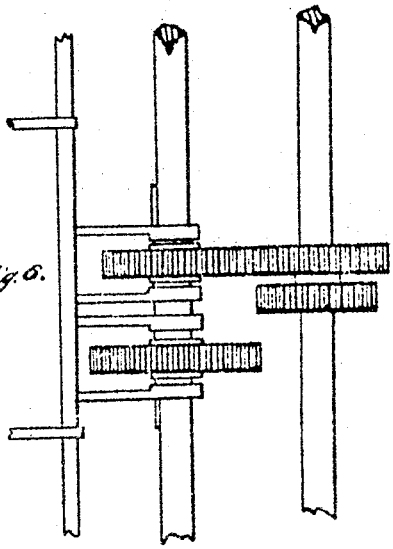

KOBBS PETERS LITHO., WASHINGTON, D. C.