R. W. Smith,

Truss Bridge.

No. 66,900. Patented July 16. 1867.

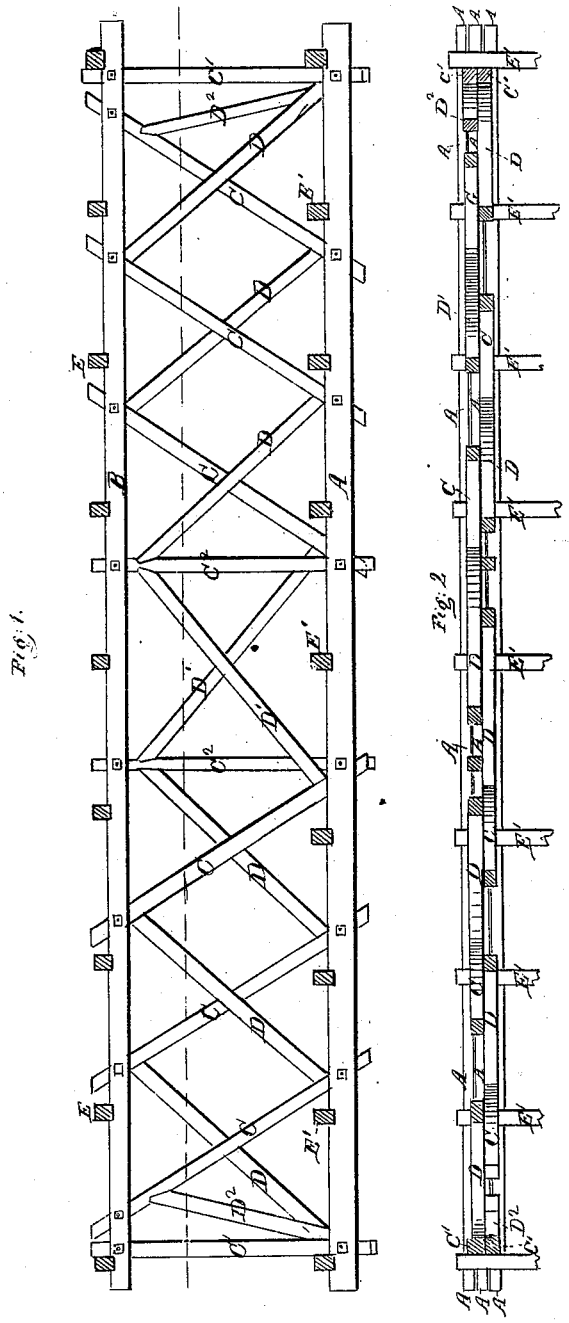

Attest
E. Clausen
Lawrence A. Murphy

R. W. Smith
Inventor
by
D. P. Holloway & Co Att'ys

N. PETERS, PHOTO-LITHOGRAPHER, WASHINGTON, D. C.