June 12, 1951 M. DONOVAN 2,556,800

DIAPER WRAP

Filed Jan. 19, 1949

Fig.1.

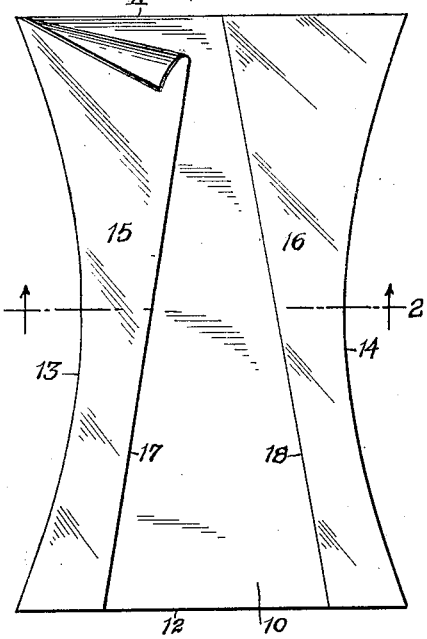

Fig.3.

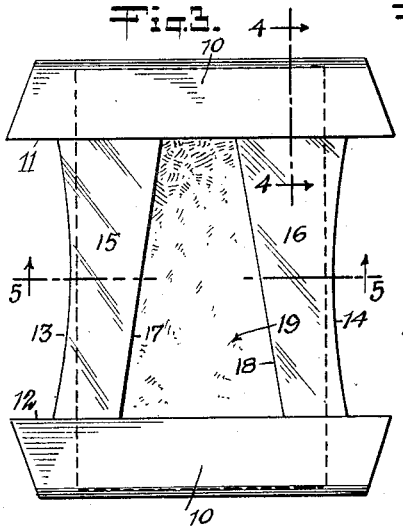

Fig.4.

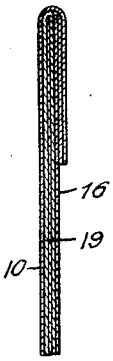

Fig.2.

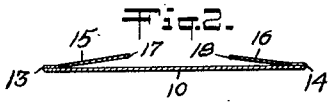

Fig.5.

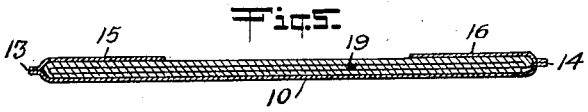

Fig.6.

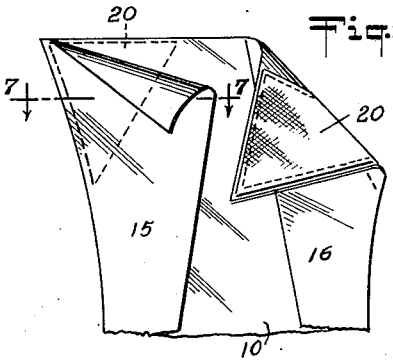

Fig.8.

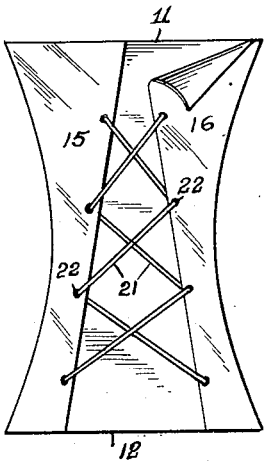

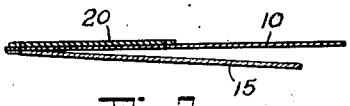

Fig.7.

Inventor
Marion Donovan
By
Munn, Liddy & Glascum
Attorneys