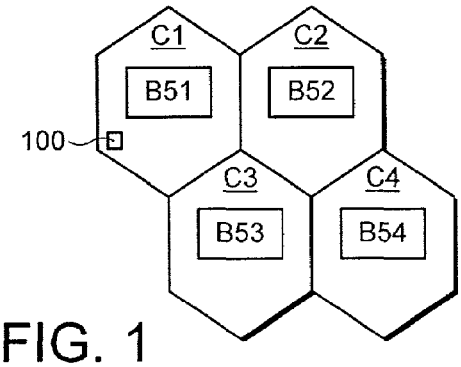
C1
C2
B51
B52
100
C3
C4
B53
B54

FIG. 1

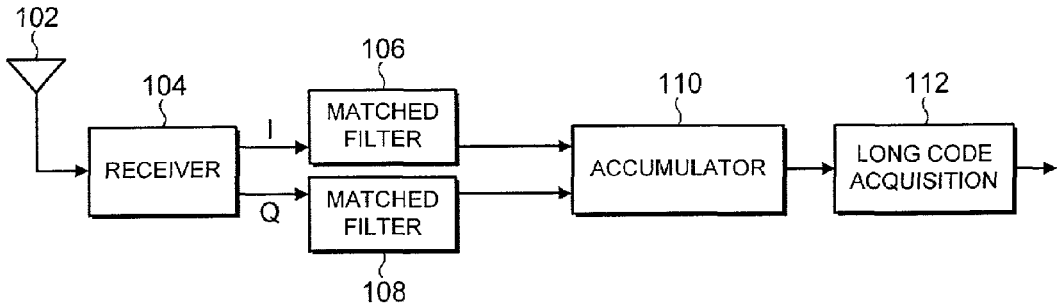
102
104
106
110
112
RECEIVER
I
Q
MATCHED FILTER
MATCHED FILTER
ACCUMULATOR
LONG CODE ACQUISITION
108

FIG. 2