United States Patent [19]

Myer

[11] **4,413,500**

[45] **Nov. 8, 1983**

[54] **TOOL FOR FORMING PRECISELY CURVED SURFACES**

[75] Inventor: **Jon H. Myer,** Woodland Hills, Calif.

[73] Assignee: **Hughes Aircraft Company,** El Segundo, Calif.

[21] Appl. No.: **417,756**

[22] Filed: **Sep. 13, 1982**

Related U.S. Application Data

[62] Division of Ser. No. 106,985, Dec. 26, 1979.

[51] **Int. Cl.**[3] **B21B 25/00**

[52] **U.S. Cl.** **72/465;** 72/378; 72/379

[58] **Field of Search** ..... 72/58, 59, 60, 63, 54, 72/350, 351, 379, 378, 465; 29/421 R

[56] **References Cited**

U.S. PATENT DOCUMENTS

15,278	7/1858	Booth	72/351
1,881,517	10/1932	Groehn	72/350
2,285,903	8/1942	Clark	72/350
2,292,462	8/1942	Milford	72/60
2,344,743	3/1944	Smith	72/63
2,410,857	11/1946	Ahern	72/60 X
2,728,317	12/1955	Clevenger et al.	72/60
2,961,028	11/1960	Bath	72/297
3,073,373	1/1963	Wheeler et al.	72/297
3,299,689	1/1967	Dolney	72/356 X
3,435,653	4/1969	Scalette et al.	72/351 X
3,529,458	9/1970	Butler et al.	72/60
3,751,956	8/1973	Blanche	72/351
4,045,986	9/1977	Haycock et al.	29/421 R
4,211,027	7/1980	Huwity	72/378

Primary Examiner—Leon Gilden

Attorney, Agent, or Firm—Lewis B. Sternfels; W. J. Bethurum; A. W. Karambelas

[57] **ABSTRACT**

Precisely curved, lightweight and low-cost reflectors for electromagnetic radiation are fabricated by use of a tool and a process in which a blank is planar stretched by uniformly applied isotropic and radially extending forces followed by deformation of the stretched blank to a precisely curved surface.
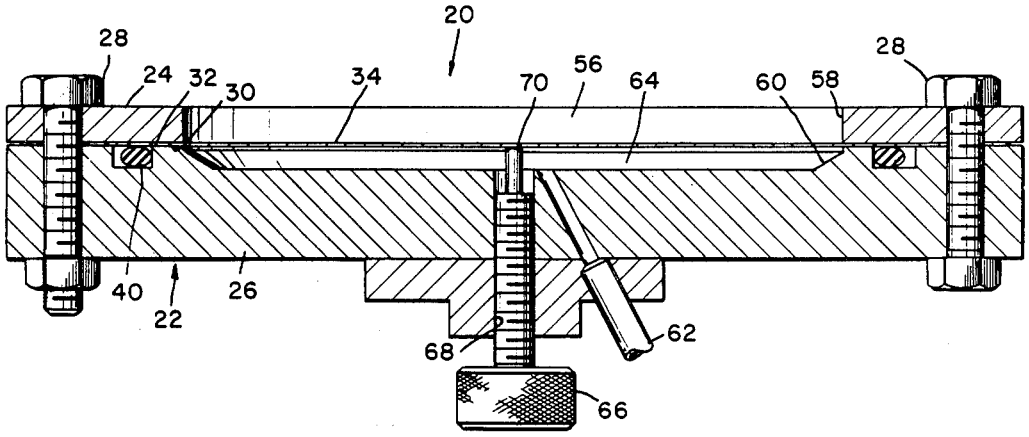
5 Claims, 15 Drawing Figures