June 6, 1950 S. I. HAYES ET AL 2,510,500

GROUNDED PILOT TRAINING APPARATUS

Filed Dec. 12, 1945 17 Sheets-Sheet 1

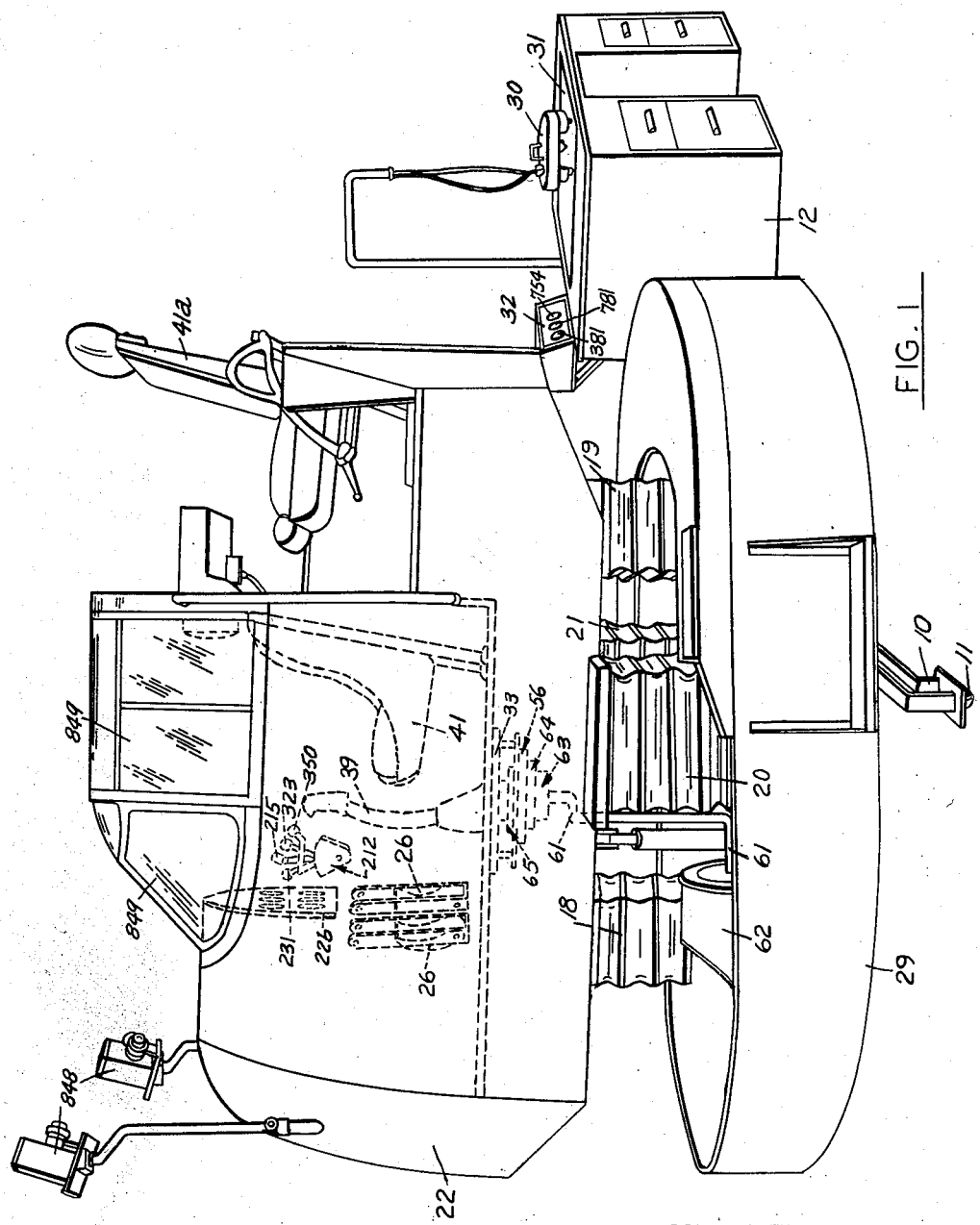


FIG. 1

STANLEY I. HAYES
MILTON S. WADE
INVENTORS

BY Donald T. Hillier
Philip S. Hopkins
ATTORNEYS