FIG. 1

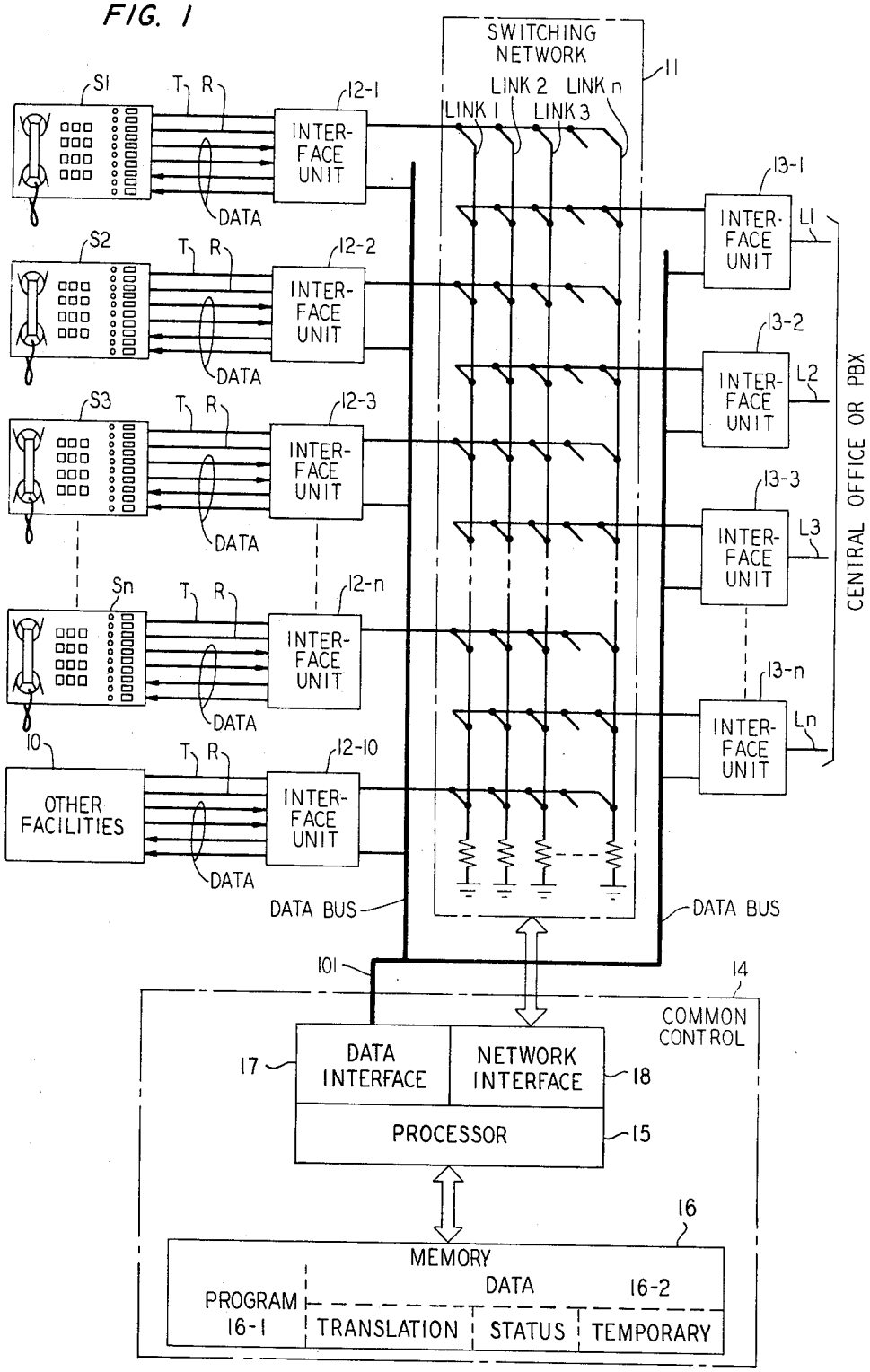
SWITCHING NETWORK
11
LINK 1
LINK 2
LINK 3
LINK n
S1
S2
S3
Sn
T
R
DATA
12-1
12-2
12-3
12-n
12-10
INTER-FACE UNIT
10
OTHER FACILITIES
13-1
13-2
13-3
13-n
L1
L2
L3
Ln
CENTRAL OFFICE OR PBX
DATA BUS
101
14
COMMON CONTROL
17
DATA INTERFACE
NETWORK INTERFACE
18
PROCESSOR
15
16
MEMORY
PROGRAM
16-1
DATA
16-2
TRANSLATION
STATUS
TEMPORARY