Jan. 15, 1935. R. GRECO ET AL 1,988,199

BARBER'S CLIPPERS

Filed April 12, 1934 2 Sheets-Sheet 1

Fig. 1.

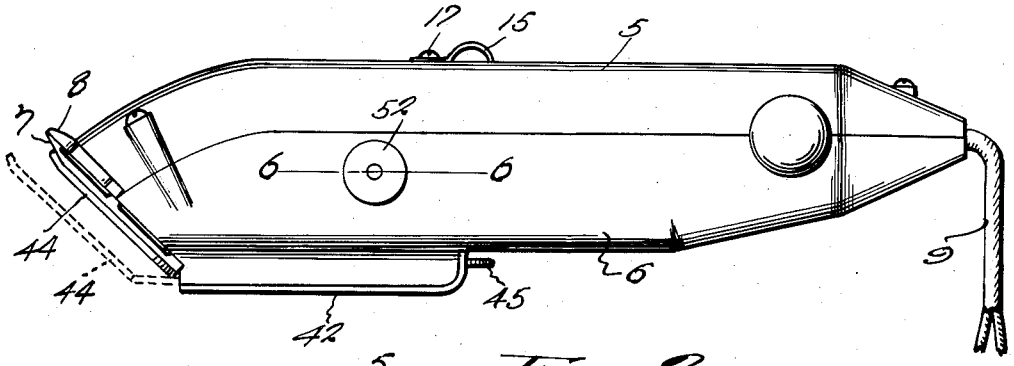

Fig. 2.

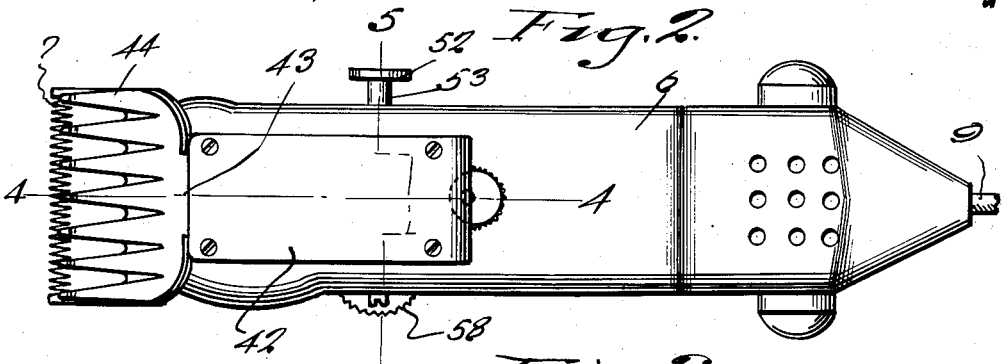

Fig. 3.

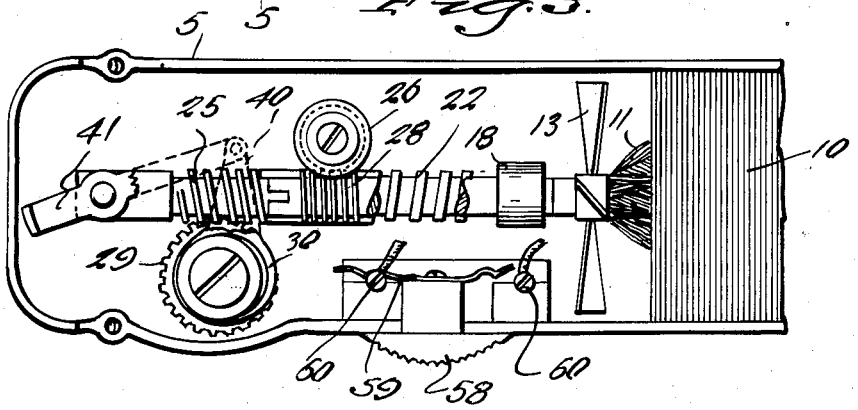

Fig. 9

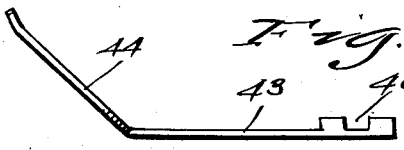

Inventors

Ralph Greco
George Getz
Frank Marino

By Clarence A. O'Brien
Attorney