US007382599B2

(12) **United States Patent**
Kikuiri et al.

(10) **Patent No.: US 7,382,599 B2**
(45) **Date of Patent: Jun. 3, 2008**

(54) **CAPACITIVE PRESSURE SENSOR**

(75) Inventors: **Katsuya Kikuiri**, Niigata-ken (JP); **Kiyoshi Sato**, Niigata-ken (JP); **Tetsuya Fukuda**, Niigata-ken (JP); **Yoshinobu Nakamura**, Niigata-ken (JP); **Hiroyuki Kobayashi**, Niigata-ken (JP)

(73) Assignee: **Alps Electric Co., Ltd**, Tokyo (JP)

(*) Notice: Subject to any disclaimer, the term of this patent is extended or adjusted under 35 U.S.C. 154(b) by 0 days.

(21) Appl. No.: **11/553,861**

(22) Filed: **Oct. 27, 2006**

(65) **Prior Publication Data**

US 2007/0095147 A1 May 3, 2007

(30) **Foreign Application Priority Data**

Oct. 31, 2005 (JP) 2005-315586

(51) **Int. Cl.**
H01G 7/00 (2006.01)

(52) **U.S. Cl.** **361/283.1**; 361/280

(58) **Field of Classification Search** 361/277–278, 361/280, 283.2, 283.3, 283.4
See application file for complete search history.

(56) **References Cited**

U.S. PATENT DOCUMENTS

4,875,134 A 10/1989 Kuisma
5,369,544 A * 11/1994 Mastrangelo 361/283.4
5,585,311 A * 12/1996 Ko 438/53
5,656,781 A * 8/1997 Kankkunen 73/724
5,675,086 A * 10/1997 Kihara et al. 73/718
5,801,313 A * 9/1998 Horibata et al. 73/718
6,556,417 B2 * 4/2003 McIntosh et al. 361/278
6,802,222 B2 * 10/2004 Ishio et al. 73/718
2006/0133006 A1 * 6/2006 Suto et al. 361/283.4

FOREIGN PATENT DOCUMENTS

JP	7-49278	2/1995
JP	8-75582	3/1996
WO	WO 91/13470	9/1991

OTHER PUBLICATIONS

Search Report dated Jan. 10, 2007 for corresponding European Patent Application No. 06 02 2314.

* cited by examiner

Primary Examiner—Eric Thomas
(74) *Attorney, Agent, or Firm*—Brinks Hofer Gilson & Lione

(57) **ABSTRACT**

A capacitive pressure sensor is provided. The capacitive pressure sensor includes a glass substrate that has a pair of surfaces facing each other. A first silicon substrate has a fixed electrode passing through the glass substrate to be exposed at one surface and a projection passing through the glass substrate to be exposed at the one surface. A second silicon substrate is bonded to the one surface of the glass substrate and is disposed to face the fixed electrode so as to form a cavity between the second silicon substrate and the fixed electrode.
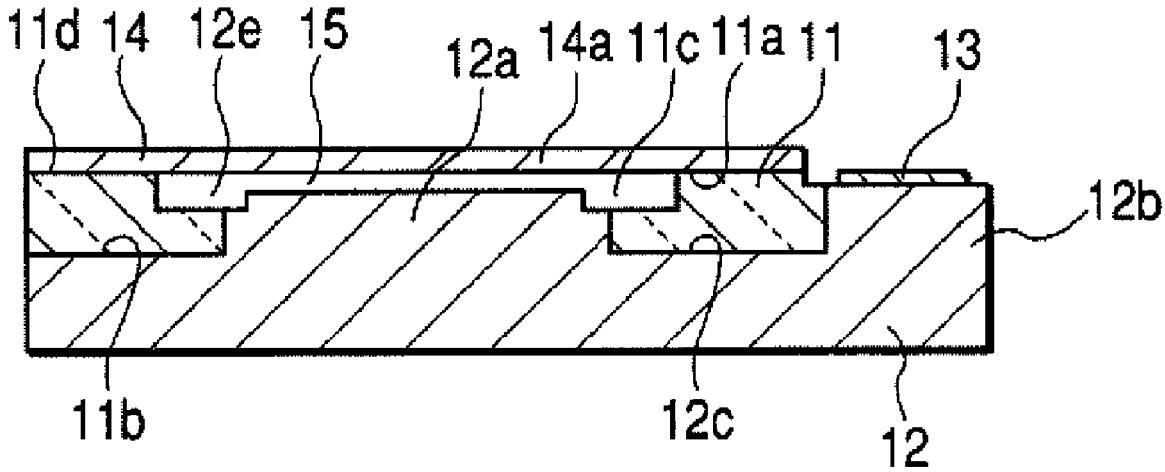
4 Claims, 5 Drawing Sheets