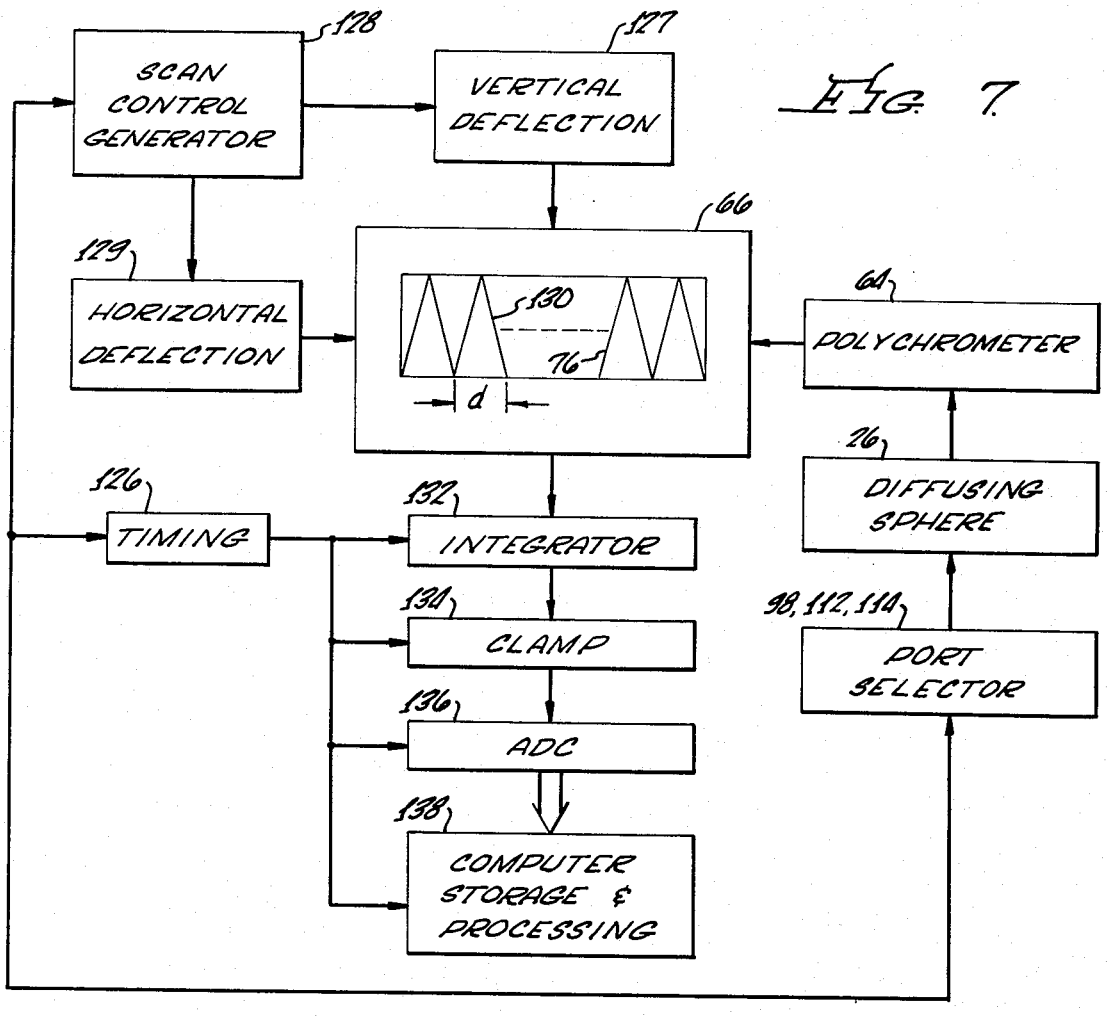
128
SCAN CONTROL GENERATOR
127
VERTICAL DEFLECTION
66
129
HORIZONTAL DEFLECTION
130
76
d
64
POLYCHROMETER
26
DIFFUSING SPHERE
126
TIMING
132
INTEGRATOR
134
CLAMP
136
ADC
138
COMPUTER STORAGE & PROCESSING
98, 112, 114
PORT SELECTOR

FIG. 7.

FIG. 6.

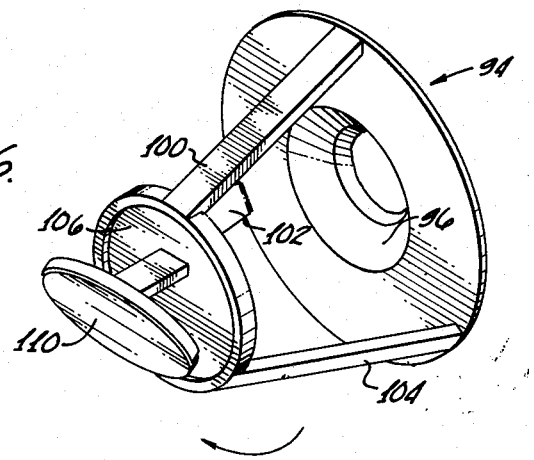
94
100
106
102
96
110
104