US009457899B2

(12) **United States Patent**
Duffy et al.

(10) **Patent No.: US 9,457,899 B2**
(45) **Date of Patent: Oct. 4, 2016**

(54) **MODULAR VEHICLE LIFT SYSTEM**

(71) Applicant: **The Boeing Company**, Chicago, IL (US)

(72) Inventors: **Michael J. Duffy**, Prospect Park, PA (US); **Scott H. Bouwer**, Wilmington, DE (US); **John J. Mattero**, Media, PA (US)

(73) Assignee: **The Boeing Company**, Chicago, IL (US)

(*) Notice: Subject to any disclaimer, the term of this patent is extended or adjusted under 35 U.S.C. 154(b) by 68 days.

(21) Appl. No.: **13/925,305**

(22) Filed: **Jun. 24, 2013**

(65) **Prior Publication Data**

US 2014/0374532 A1 Dec. 25, 2014

(51) **Int. Cl.**

G01C 23/00	(2006.01)
B64C 37/02	(2006.01)
B64C 39/02	(2006.01)

(52) **U.S. Cl.**

CPC ***B64C 37/02*** (2013.01); ***B64C 39/024*** (2013.01); *B64C 2201/027* (2013.01); *B64C 2201/108* (2013.01); *B64C 2201/128* (2013.01); *B64C 2201/146* (2013.01)

(58) **Field of Classification Search**

None

See application file for complete search history.

(56) **References Cited**

U.S. PATENT DOCUMENTS

3,013,743	A *	12/1961	Keeney	244/3
3,332,643	A *	7/1967	Toner	244/7 R
3,656,723	A *	4/1972	Piasecki et al.	244/2
3,743,214	A *	7/1973	Maciolek	244/2
4,591,112	A *	5/1986	Piasecki et al.	244/26
4,601,444	A *	7/1986	Lindenbaum	244/26
5,082,205	A *	1/1992	Caufman	244/25
7,357,352	B2 *	4/2008	Speer et al.	244/2
7,699,260	B2 *	4/2010	Hughey	244/17.23
7,959,104	B2 *	6/2011	Kuntz	244/2
8,322,648	B2 *	12/2012	Kroetsch et al.	244/17.23
8,886,371	B2 *	11/2014	Peters	701/13
2006/0198713	A1 *	9/2006	Azzalin et al.	411/8
2007/0023581	A1 *	2/2007	La	244/165
2007/0102565	A1 *	5/2007	Speer et al.	244/2
2009/0194634	A1 *	8/2009	Stelte	244/1 R
2009/0250549	A1 *	10/2009	Wiggerich	244/17.11
2009/0283629	A1 *	11/2009	Kroetsch et al.	244/17.23

(Continued)

FOREIGN PATENT DOCUMENTS

GB	2 455 374	6/2009
WO	WO 2008/018857	2/2008

OTHER PUBLICATIONS

Extended European Search Report dated Oct. 30, 2014 from European Application No. 14167622.1.

(Continued)

Primary Examiner — Medhat Badawi

(74) *Attorney, Agent, or Firm* — Baldauff IP, LLC; Michael J. Baldauff, Jr.

(57) **ABSTRACT**

Apparatus, systems, and methods provide for a modular vehicle system utilized for lifting and maneuvering payloads. According to aspects of the disclosure, any number of individual lift vehicles may be connected to create a unified lift vehicle. The individual lift vehicles may be placed adjacent to one another according to a determined lifting array formation and coupled together using connection mechanisms. The connection mechanisms rigidly and communicatively connect the individual lift vehicles to create the unified lift vehicle suitable for lifting and maneuvering a payload.
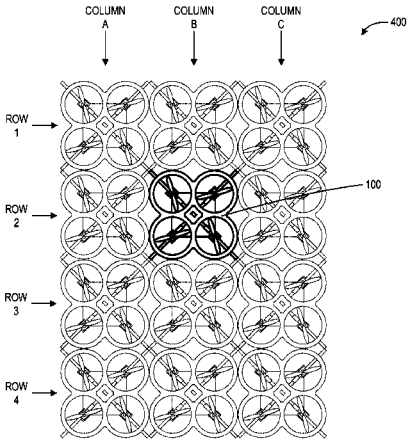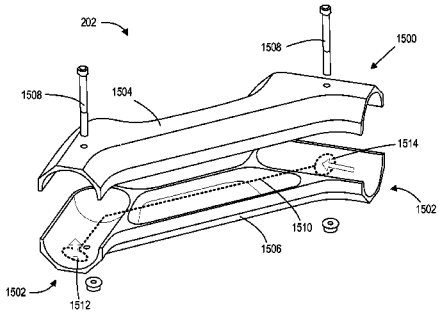
23 Claims, 27 Drawing Sheets