June 21, 1966 R. A. SOMERS ETAL 3,257,599

BATTERY OPERATED ELECTRIC SHAVER AND CHARGER

Filed Jan. 11, 1960 3 Sheets-Sheet 1

FIG. 1

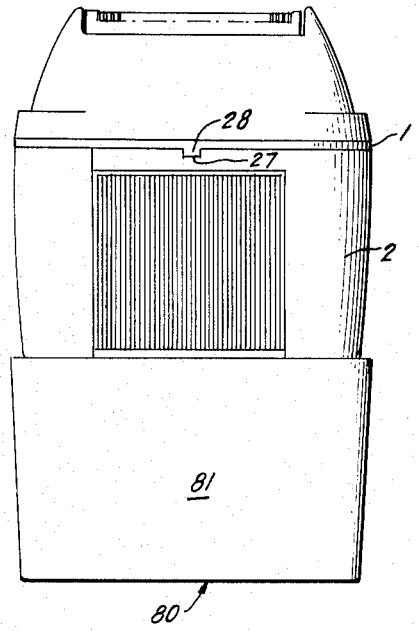

FIG. 4

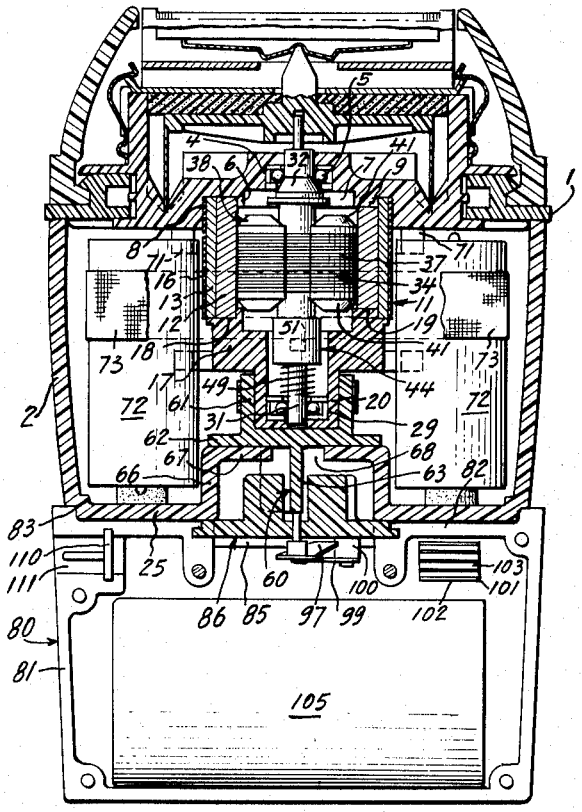

FIG. 2

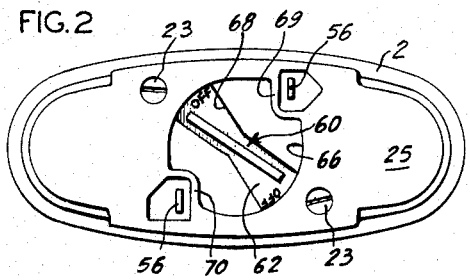

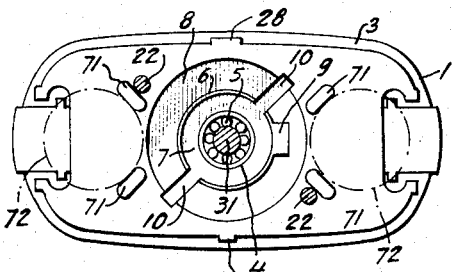

FIG. 5

FIG. 3

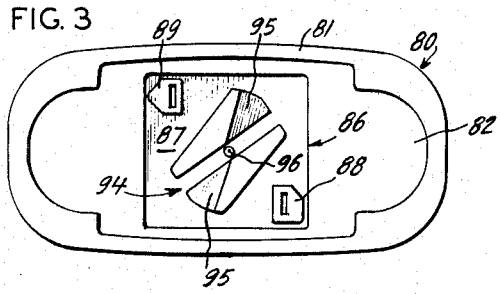

INVENTORS
RAYMOND A. SOMERS
ROBERT J. TOLMIE
BY Roland T. Bock
ATTORNEY