MANUFACTURE OF SEALED PACKAGES FROM STRIP STOCK

Filed Sept. 1, 1965 Sheet 2 of 9

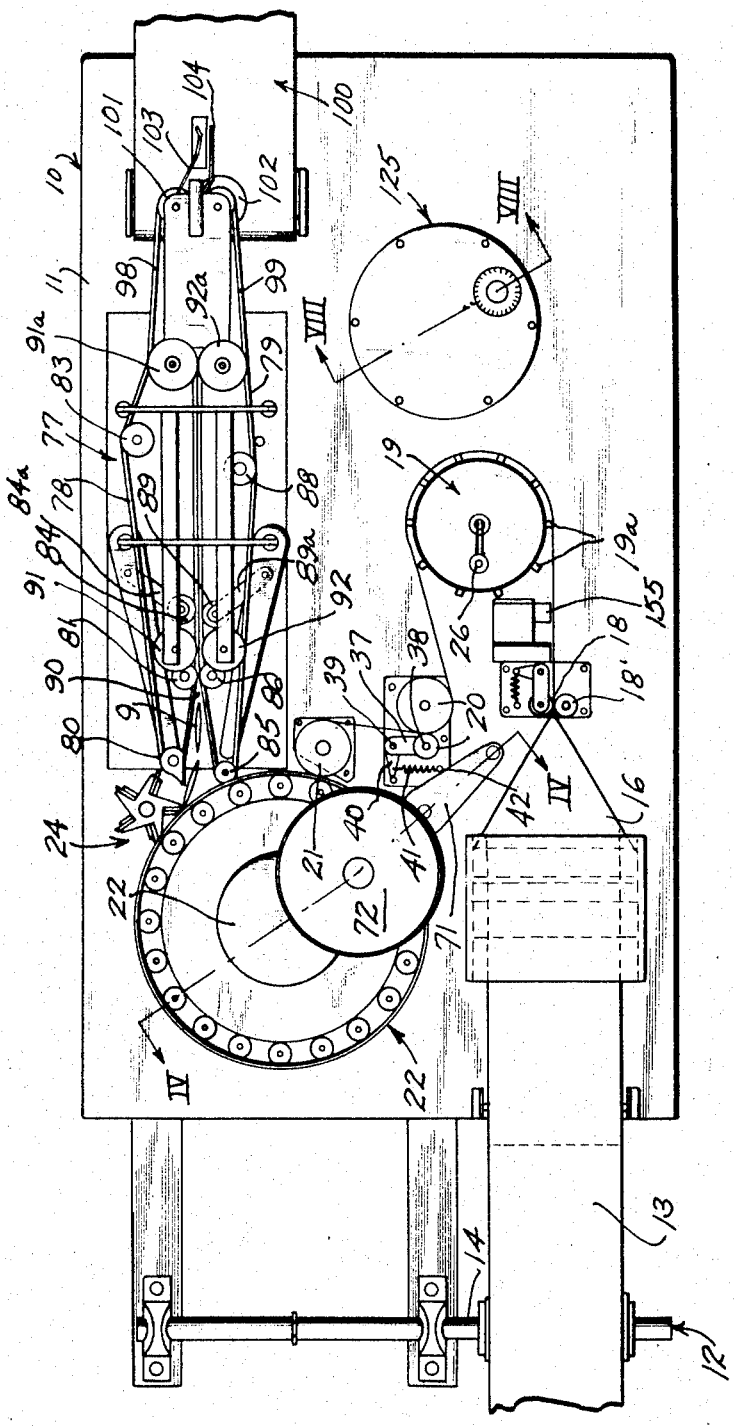

FIG-2

INVENTORS
Charles E. Cloud
Richard F. Purvinis

BY Hill, Sherman, Meroni, Gross & Simpson ATTORNEYS