United States Patent [19]

Davis

[11] **4,352,399**

[45] **Oct. 5, 1982**

[54] **BIT BREAKER AND HANDLE**

[76] Inventor: **Kenneth Davis,** P.O. Box 7906, Midland, Tex. 79703

[21] Appl. No.: **202,687**

[22] Filed: **Oct. 31, 1980**

[51] **Int. Cl.**[3] **E21B 10/00**

[52] **U.S. Cl.** ..... **175/315;** 175/329; 175/393; 173/164; 81/90 B

[58] **Field of Search** ..... 175/315, 329, 327, 307, 175/393, 87; 81/90 B, 90 C, 121 R; 173/164

[56] **References Cited**

U.S. PATENT DOCUMENTS

2,719,025 9/1955 Shore ..... 81/90 B
3,554,298 1/1971 Klein 173/164

OTHER PUBLICATIONS

"Sparkle Aplenty", *Drilling-Dew,* Dec. 1976, p. 61, 175-329.

Primary Examiner—William F. Pate, III
Attorney, Agent, or Firm—Marcus L. Bates

[57] **ABSTRACT**

A bit breaker and handle for use in conjunction with a drill bit. The bit breaker is in the form of a plate member which is provided with an outside edge having a configuration to be drivingly received within the kelly drive of a drilling rig turntable. The plate is apertured to telescopingly receive a marginal length of the main body of the bit therethrough. A plurality of lugs are circumferentially placed about the aperture. The lugs are slidably received within an enlarged marginal length of the external bit passageways, and abuttingly engage a shoulder formed at the outlet end of the passageway. The drill tubing is held while the turntable is rotated in the appropriate direction to "make up" or "break out" the tubing threads respective to the threads of the bit. The external passageways are further provided with radially extending counterbores which receive the marginal end of a handle therewithin so that the bit can be easily lifted respective to the plate member.
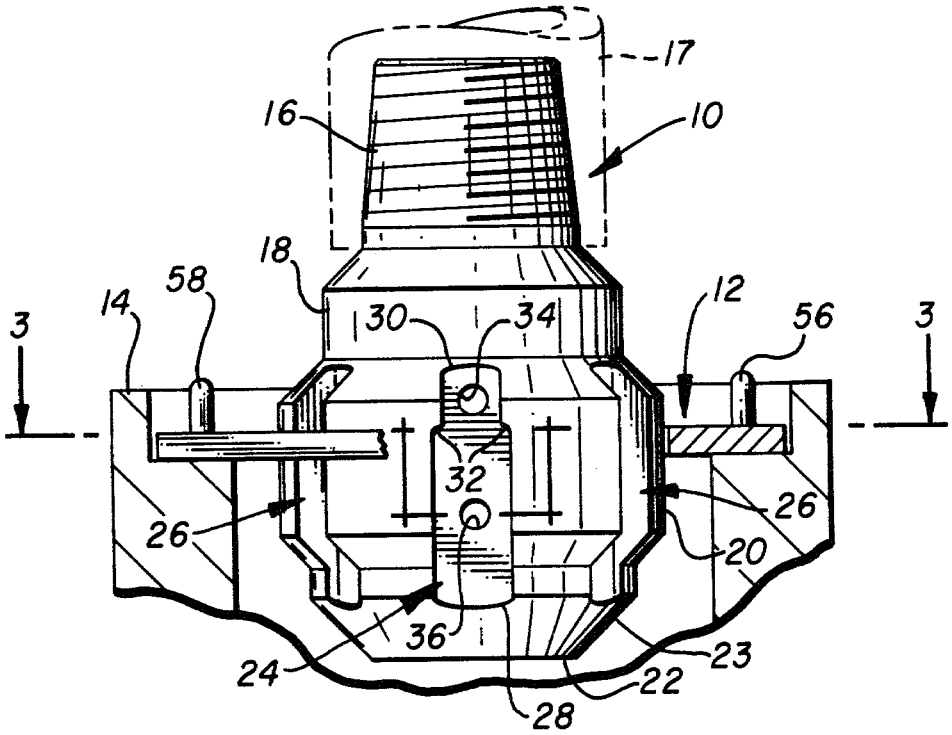
9 Claims, 6 Drawing Figures