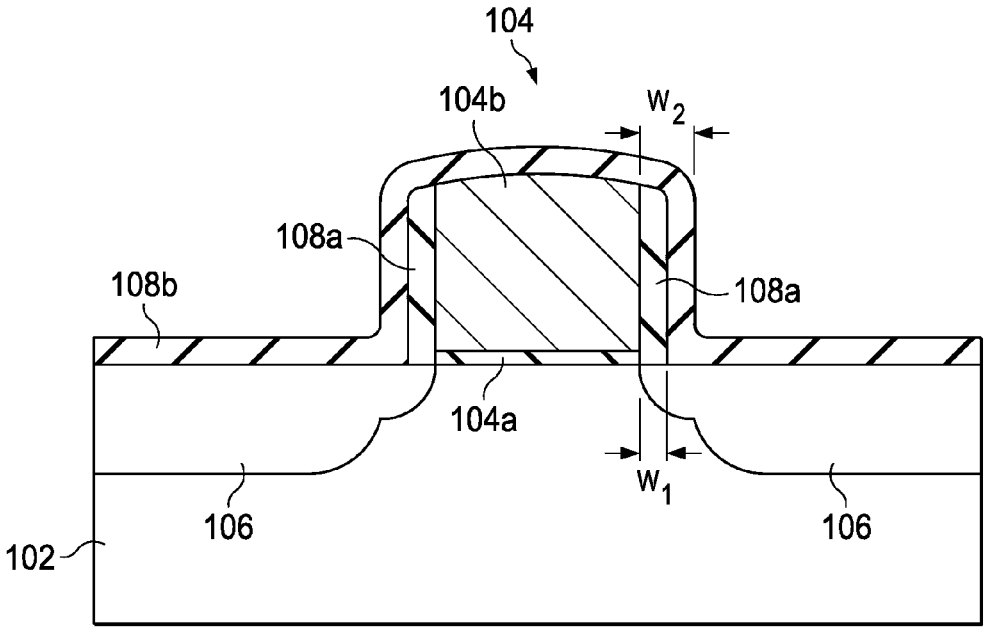
104
104b
W_2
108a
108b
108a
104a
W_1
106
106
102

FIG. 1

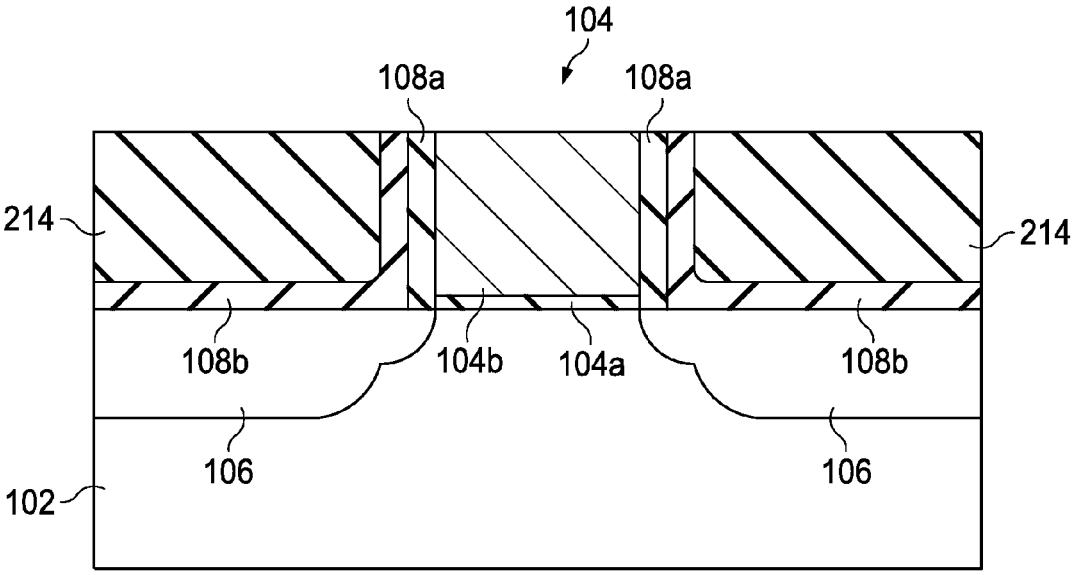
104
108a
108a
214
214
108b
104b
104a
108b
106
106
102

FIG. 2